PHILIPS

DATA HANDBOOK

ELECTRONIC COMPONENTS AND MATERIALS DIVISION

ELECTRON TUBES

PART 8 AUGUST 1970

T.V. Picture Tubes

ELECTRON TUBES

Part 8 **August 1970**

General section

T.V. Picture tubes

DATA HANDBOOK SYSTEM

To provide you with a comprehensive source of information on electronic components, subassemblies and materials, our Data Handbook System is made up of three series of handbooks, each comprising several parts.
The three series, identified by the colours noted, are:

ELECTRON TUBES (9 parts) BLUE

SEMICONDUCTORS AND INTEGRATED CIRCUITS (5 parts) RED

COMPONENTS AND MATERIALS (5 parts) GREEN

The several parts contain all pertinent data available at the time of publication, and each is revised and reissued annually; the contents of each series are summarized on the following pages.
We have made every effort to ensure that each series is as accurate, comprehensive and up-to-date as possible, and we hope you will find it to be a valuable source of reference. Where ratings or specifications quoted differ from those published in the preceding edition they will be pointed out by arrows. You will understand that we can not guarantee that all products listed in any one edition of the handbook will remain available, or that their specifications will not be changed, before the next edition is published. If you need confirmation that the pusblished data about any of our products are the latest available, may we ask that you contact our representative. He is at your service and will be glad to answer your inquiries.

January 1970

ELECTRON TUBES (BLUE SERIES)

This series consists of the following parts, issued on the dates indicated.

Part 1 — **January 1970**

Transmitting tubes (Tetrodes, Pentodes)
Associated accessories

Part 2 — **February 1970**

Tubes for microwave equipment

Part 3 — **March 1970**

Special Quality tubes
Miscellaneous devices

Part 4 — **April 1970**

Receiving tubes

Part 5 — **May 1970**

Cathode-ray tubes
Photo tubes
Camera tubes
Photoconductive devices
Associated accessories

Part 6 — **June 1970**

Photomultiplier tubes
Scintillators
Photoscintillators
Radiation counter tubes
Semiconductor radiation detectors
Neutron generator tubes
Associated accessories

Part 7 — **July 1970**

Voltage stabilizing and reference tubes
Counter, selector, and indicator tubes
Trigger tubes
Switching diodes
Thyratrons
Ignitrons
Industrial rectifying tubes
High-voltage rectifying tubes

Part 8 — **August 1970**

T.V. Picture tubes

Part 9 — **December 1969**

Transmitting tubes (Triodes)
Tubes for R.F. heating (Triodes)
Associated accessories

SEMICONDUCTORS AND INTEGRATED CIRCUITS (RED SERIES)

This series consists of the following parts, issued on the dates indicated.

Part 1 Diodes and Thyristors — **September 1969**

General
Signal diodes
Variable capacitance diodes
Voltage regulator diodes
Rectifier diodes
Thyristors, diacs, triacs
Rectifier stacks
Accessories
Heatsinks

Part 2 Low frequency; Deflection — **October 1969**

General
Low frequency transistors (low power)
Low frequency power transistors
Deflection transistors
Accessories

Part 3 High frequency; Switching — **November 1969**

General
High frequency transistors
Switching transistors
Accessories

Part 4 Special types — **December 1969**

General
Transmitting transistors
Field effect transistors
Dual transistors
Diodes and transistors for thick-and thin-film circuits
Photo devices
Accessories

Part 5 Integrated Circuits — **February 1970**

General
Digital integrated circuits
- FC family; standard temperature range
- FC family; extended temperature range
- FD family
- FJ family; standard temperature range

Linear integrated circuits

February 1970

COMPONENTS AND MATERIALS (GREEN SERIES)

This series consists of the following parts, issued on the dates indicated.

Part 1 Circuit Blocks, Input/Output Devices — **September 1969**

Circuit blocks 100kHz Series
Circuit blocks 1-Series
Circuit blocks 10-Series
Circuit blocks 20-Series
Circuit blocks 40- Series
Counter modules 50-Series
Norbits 60-Series
Circuit blocks for ferrite core memory drive
Input/output devices

Part 2 Resistors, Capacitors — **November 1969**

Fixed resistors
Variable resistors
Non-linear resistors
Ceramic capacitors
Polycarbonate, paper, mica, polystyrene capacitors
Electrolytic capacitors
Variable capacitors

Part 3 Radio, Audio, Television — **January 1970**

FM tuners
Coils
Piezoelectric ceramic resonators and filters
Loudspeakers
Electronic organ assemblies
Television tuners
Components for black and white television
Components for colour television
Deflection assemblies for camera tubes
Audio and mains transformers

Part 4 Magnetic Materials, White Ceramics — **March 1970**

Ferrites for radio, audio and television
Ferroxcube potcores and square cores
Microchokes
Ferroxcube transformer cores
Piezoxide
Permanent magnet materials

Part 5 Memory Products, Magnetic Heads, Quartz Crystals, Microwave Devices, Variable Transformers, Electro-mechanical Components — **June 1970**

Ferrite memory cores
Matrix planes, matrix stacks
Complete memories
Magnetic heads
Quartz crystal units, crystal filters
Isolators, circulators
Variable mains transformers
Electro-mechanical components

June 1970

Technology relating to the products described in this publication is shared by the following firms.

Argentina
FAPESA I.y.C.
Melincué 2594
Tel. 50-9941/8155
BUENOS AIRES

Australia
Philips Electrical Pty. Ltd.
Miniwatt Electronics Division
20, Herbert St.
Tel. 43-2171
ARTARMON, N.S.W.

Austria
WIVEG
Prinz Eugenstrasse 32
Tel. 65 16 21
1041 WIEN

Belgium
M.B.L.E.
80, rue des Deux Gares
tel. 23 00 00
BRUXELLES 7

Brazil
IBRAPE S.A.
Rua Manoel Ramos Paiva 506
Tel. 93-5141
SAO PAULO

Canada
Philips Electron Devices
116 Vanderhoof Ave.
Tel. 425-5161
TORONTO 17, Ontario

Chile
Philips Chilena S.A.
Av. Santa Maria 0760
Tel. 39 40 01
SANTIAGO

Columbia
SADAPE S.A.
Calle 19, No. 5-51. Offs. 302/306
Tel. 422-175
BOGOTA D.E. 1

Denmark
Miniwatt A/S
Emdrupvej 115
Tel. 69 16 22
KØBENHAVN NV

Finland
Oy Philips A.B.
Elcoma Division
Kaivokatu 8
Tel. 10 915
HELSINKI 10

France
R.T.C.
La Radiotechnique-Compelec
Avenue Ledru Rollin 130
Tel. 797-99-30
PARIS 11

Germany
VALVO G.m.b.H.
Valvo Haus
Burchardstrasse 19
Tel. (0411) 33 91 31
2 HAMBURG 1

Greece
Philips S.A. Hellénique
Service Division
54, Av. Syngrou
ATHENES

Hong Kong
Philips Hong Kong Ltd.
Components Dept.
St. George's Building, 21st Fl.
Tel. K-428205
HONG KONG

India
INBELEC Div. of
Philips India Ltd.
Band Box Building
254-D, Dr. Annie Besant Road
Tel. 45 33 86, 45 64 20, 45 29 86
Worli, BOMBAY 18 (WB)

Indonesia
P.T. Philips-Ralin Electronics
Elcoma Div.
Djalan Gadjah Mada 18
Tel. 44163
DJAKARTA

Ireland
Philips Electrical (Ireland) Pty.
Newstead, Clonskeagh
Tel. 69 33 55
DUBLIN 6

Italy
Philips S.p.A.
Sezione Elcoma
Piazza IV Novembre 3
Tel. 69.94
MILANO

Japan
I.D.C.C. Ltd.
Kokusai Building, 7th floor
Marunouchi
Tel. (213) 6751.7
TOKYO

Mexico
Electronica S.A. de C.V.
Varsovia No. 36
Tel. 5-33-11-80
MEXICO 6, D.F.

Netherlands
Philips Nederland N V.
Afd. Elonco
Boschdijk, VB
Tel. (040) 43 33 33
EINDHOVEN

New Zealand
EDAC Ltd.
70-72 Kingsford Smith Street
Tel. 873159
WELLINGTON

Norway
Electronica A/S
Middelthunsgate 27
Tel. 46 39 70
OSLO 3

Peru
CADESA
Av. Abancay 1176
Offs. 606-607
Tel. 7 73 17
LIMA

Portugal
Philips Portuguesa S.A.R.L.
Rua Joaquim Antonio de Aguiar 66
Tel. 68 31 21/9
LISBOA

South Africa
EDAC (Pty) Ltd.
South Park Lane
New Doornfontein
Tel. 24/6701-2
JOHANNESBURG

Spain
COPRESA S.A.
Balmes 22
Tel. 2 32 03 00
BARCELONA 7

Sweden
ELCOMA A.B.
Lidingövägen 50
Tel. 08/67 97 80
10250 STOCKHOLM 27

Switzerland
Philips A.G.
Edenstrasse 20,
Tel. 051/44 22 11
CH-8027 ZUERICH

Taiwan
Philips Taiwan Ltd.
P.O. Box 22978
Tel. 559742
TAIPEI

Turkey
Türk Philips Ticaret A.S.
EMET Department
Gümüşsuyu Cad. 78-80
Tel. 45.32.50
Beyoglü, ISTANBUL

United Kingdom
Mullard Ltd.
Mullard House
Torrington Place
Tel. 01-580 6633
LONDON W.C. 1

United States
Amperex Electronic Corp.

Electron Tubes Div.
Tel. 516 WE 1-6200
HICKSVILLE N.Y.

Sem. and Microcircuits Div.
Tel. 401-762-9000
SLATERSVILLE R.I. 02876

Electronic Components Div.
Tel. 516-234-7000
HAUPPAGE N.Y.

Uruguay
Luzilectron S.A.
Rondeau 1567, piso 5
Tel. 9 43 21
MONTEVIDEO

Venezuela
C.A. Philips Venezolana
Elcoma Department
Colinas de Bello Monte
Tel. 72.01.51
CARACAS

T.V. Picture tubes

LIST OF SYMBOLS

Symbols denoting electrodes/elements and electrode/element connections

Heater or filament	f
Cathode	k
Grid Grids are distinguished by means of an additional numeral; the electrode nearest to the cathode having the lowest number.	g
External conductive coating, rim-band	m
Fluorescent screen	l
Tube pin which must not be connected externally	i.c.
Tube pin which may be connected externally	n.c.

Symbols denoting voltages

Symbol for voltage, followed by an index denoting the relevant electrode/element	V
Heater or filament voltage	V_f
Peak value of a voltage	V_p
Peak to peak value of a voltage	V_{pp}

Symbols denoting currents

Remark I The positive electrical current is directed opposite to the direction of the electron current.

Remark II The symbols quoted represent the average values of the concerning current unless otherwise stated.

Symbol for current followed by an index denoting the revelant electrode	I
Heater or filament	I_f

Symbols denoting powers

Dissipation of the fluorescent screen	W_ℓ
Grid dissipation	W_g

Symbols denoting capacitances

See I.E.C. Publication 100

Symbols denoting resistances

Symbol for resistance followed by an index for the revelant electrode pair. When only one index is given the second electrode is the cathode.	R
Ditto impedance	Z

Symbols denoting various quantities

Brightness	B
Frequency	f
Magnetic field strength	H

GENERAL OPERATIONAL RECOMMENDATIONS
T.V. PICTURE TUBES

CONTENTS

1 Introduction
2 Spread in tube characteristics
3 Spread and variation in operating conditions
3.1 Spread
3.2 Variation
4 Limiting values
4.1 Rating systems
4.1.1 Absolute max. rating system
4.1.2 Design max. rating system
4.1.3 Design centre rating system
4.2 More than one rating system
5 Heater circuit
5.1 Deviation from nominal heater voltage or current
5.2 Series diodes
5.3 Heater supply from the line output transformer
5.4 Stand-by condition of the heater
6 Cathode to heater voltage
7 Intermediate electrodes
8 Elektrode voltages
9 Luminescent screen
10 External conductive coating
11 Metal rimband
12 Flash-over
13 Handling
14 Mounting
15 Dimensions
16 Reference line
17 Corner cutting or neck shadowing
18 Raster centring

GENERAL OPERATIONAL RECOMMENDATIONS
T.V. PICTURE TUBES

1. INTRODUCTION

Equipment design should be based on the characteristics as stated in the data sheets.
Where deviations from these general recommendations are permissible or necessary, statements to that effect will be made.
If applications are considered not referred to in the data sheets of the relevant tube type extra care should be taken with circuit design to avoid that the tube is overloaded due to unfavourable operating conditions.

2. SPREAD IN TUBE CHARACTERISTICS

The spread in tube characteristics is the difference between maximum and minimum values. Values not qualified as maximum or minimum are nominal ones. It is evident that average or nominal values, as well as spread figures, may differ according to the number of tubes of a certain type that are being checked. No guarantee is given for values of characteristics in settings substantially differing from those specified in the data sheets.

3. SPREAD AND VARIATION IN OPERATING CONDITIONS

The operating conditions of a tube are subject to spread and/or variation.

3.1 Spread. Spread in an operating condition is a permanent deviation from an average condition due to, e.g., component value deviations. The average condition is found from such a number individual cases taken at random that an increase of the number will have a negligible influence.

3.2 Variation. Variation in an operating condition is non-permanent (occurs as a function of time), e.g., due to supply voltage fluctuations. The average value is calculated over a period such that a prolongation of that period will have negligible influence.

4. LIMITING VALUES

4.1 Limiting values are in accordance with the applicable rating system as defined by I.E.C. publication 134.
Reference may be made to one of the following 3 rating systems.

4.1.1 Absolute maximum rating system. Absolute maximum ratings are limiting values of operating and environmental conditions applicable to any electronic device of a specified type as defined by its published data, and should not be exceeded under the worst probable conditions.

These values are chosen by the device manufacturer to provide acceptable serviceability of the device, taking no responsibility for equipment variations, environmental variations, and the effects of changes in operating conditions due to variations in the characteristics of the device under consideration and of all other electronic devices in the equipment.

The equipment manufacturer should design so that, initially and throughout life, no absolute maximum value for the intended service is exceeded with any device under the worst probable operating conditions with respect to supply voltage variation, equipment components spread and variation, equipment control adjustment, load variations, signal variation, environmental conditions, and spread or variations in characteristics of the device under considerations and of all other electronic devices in the equipment.

4.1.2 Design-maximum rating system. Design-maximum ratings are limiting values of operating and environmental conditions applicable to a bogey electronic device* of a specified type as defined by its published data, and should not be exceeded under the worst probable conditions.

These values are chosen by the device manufacturer to provide acceptable serviceability of the device, taking responsibility for the effects of changes in operating conditions due to variations in the characteristics of the electronic device under consideration.

The equipment manufacturer should design so that, initially and throughout life, no design-maximum value for the intended service is exceeded with a bogey device under the worst probable operating conditions with respect to supply-voltage variation, equipment component variation, variation in characteristics of all other devices in the equipment, equipment control adjustment, load variation, signal variation and environmental conditions.

4.1.3 Design-centre rating system. Design-centre ratings are limiting values of operating and environmental conditions applicable to a bogey electronic device* of a specified type as defined by its published data, and should not be exceeded under average conditions.

These values are chosen by the device manufacturer to provide acceptable serviceability of the device in average applications, taking responsibility for normal changes in operating conditions due to rated supply-voltage variation, equipment component spread and variation, equipment control adjustment, load variation, signal variation, environmental conditions, and variations or spread in the characteristics of all electronic devices.

The equipment manufacturer should design so that, initially, no design-centre value for the intended service is exceeded with a bogey electronic device* in equipment operating at the stated normal supply-voltage.

Note*. A bogey tube is a tube whose characteristics have the published nominal values for the type. A bogey tube for any particular application can be obtained by considering only those characteristics which are directly related to the application.

4.2 If the tube data specify limiting values according to more than one rating system the circuit has to be designed so that none of these limiting values is exceeded under the relevant conditions.

4.3 In addition to the limiting values given in the individual data sheets the directives in the following paragraphs should be observed.

5. HEATER CIRCUIT (See also 3)

5.1 Any deviation from the nominal heater voltage (tubes for parallel connection) or from the nominal heater current (tubes for series connection) has a detrimental effect on tube performance and life, and should therefore be kept at a minimum. Such deviations may be caused by:

a) Spread in the characteristics of components such as transformers, resistors, capacitors etc.

b) Mains voltage fluctuations.

The maximum deviation of the heater voltage should not exceed ± 15% (design maximum value) in the case of parallel connection, and the maximum deviation of the heater current should not exceed ± 8% (design maximum value) in the case of series connection.

5.2 When series diodes are applied the D.C. component of the resulting heater voltage should preferably be negative with respect to the cathodes of the tubes. In the case of series diodes being used in combination with a series resistor the following formula can be applied:

$$R_S = \frac{\frac{1}{2}\sqrt{2}\,V_m - V_f}{I_f}$$

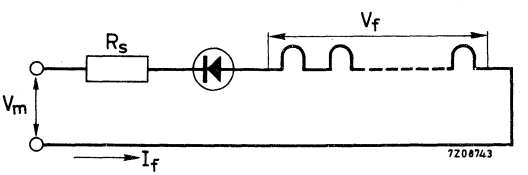

In the above formula:

V_m = nominal mains voltage
R_S = nominal series resistance
V_f = sum of nominal heater voltage for all tubes in the chain
I_f = nominal heater current

It should be noted that the influence of variations in the series resistance, and the mains voltage should not result in heater current variations greater than ± 8% (design maximum value).

5.3 Heater supply from the line output transformer.

Heater supply from the line output transformer is permissible provided the r.m.s. value of the heater voltage remains within the limits given under 5.1.

5.4 Stand-by condition of the heater.

In order not to impair the tube life it is recommended that during stand-by the heater voltage be decreased to a maximum of 75% of its nominal value.

6. CATHODE TO HEATER VOLTAGE

The voltage between cathode and heater should be as low as possible and never exceed the limiting value given on the data sheets of the individual tubes. The values given under "Limiting values" relate to that side of the heater where the voltage between cathode and heater is greatest. The voltage between cathode and heater may be D.C., A.C., or a combination of both voltages. Unless otherwise stated, the maximum values quoted for the voltage between cathode and heater indicate the maximum permissible value (D.C. component). If an A.C. voltage, or an combination of D.C. and A.C. voltages, is applied the peak value may be twice the rated V_{kf}; however, unless otherwise stated, the peak value shall never exceed 315 V. The D.C. component is not allowed to exceed the published value.

Unless otherwise stated, the V_{kf} max. holds for both polarities of the voltage; however, a positive cathode is usually the most favourable in view of insulation during life.

In order to avoid excessive hum the A.C. component of the heater to cathode voltage should be as low as possible and never exceed 20 V_{rms} (mains frequency).

7. INTERMEDIATE ELECTRODES (between cathode and final accelerator)

In no circumstances should the tube be operated without a D.C. connection between each electrode and the cathode. The total effective impedance between each electrode and the cathode should never exceed the published maximum value. However, no electrode should be connected directly to a high energy source such as the hot line. When such a connection is required, it should be made via a series resistor of not less then 1 kΩ.

8. ELECTRODE VOLTAGES

All electrode voltages are given with respect to cathode.
For cathode drive service the reference point is grid No.1

8.1 Grid No.1 cut-off voltage

Generally curves showing the limits of grid No.1 cut-off voltage for specific values of the first accelerator voltage are included in the data. The brightness control should be so dimensioned that it can handle any tube within the limits shown, at the appropriate first accelerator voltage.

The published limits are determined at an ambient illumination level of 10 lux with the aid of a focused raster. Because the brightness of a focused spot is in general greater than that of a raster, the visual cut-off voltage determined with the aid of a spot will be more negative by about 5 V.

8.2 Grid No. 2 voltage

For each individual tube the grid No. 2 voltage can be adjusted so that the beam current is cut off at a fixed value within the published range of the grid No. 1 voltage.
In the data, graphs are included giving the relationship between the grid No. 2 voltage and the grid No. 1 cut-off voltage.

8.3 Focusing electrode voltage

Individual tubes will have satisfactory focus over the entire screen at some value within the published range of the focusing voltage.
If centre-focusing is desired this range will shift in the negative direction.

9. LUMINESCENT SCREEN

To prevent permanent damage to the screen material care should be taken

a. not to operate the tube with a stationary picture at high beam currents for extended periods
b. not to operate the tube with a stationary or slowly moving spot except at extremely low beam currents
c. to choose the time constants of the grid No. 1 the grid No. 2 and the time bases supply line circuits such that sufficient beam current is maintained to discharge the e.h.t. capacitance before deflection has ceased after equipment has been switched off.

10. EXTERNAL CONDUCTIVE COATING

The external conductive coating must be connected to the chassis. The capacitance of this coating to the final accelerating electrode may be used to provide smoothing for the e.h.t. supply.
The coating is not a perfect conductor and in order to reduce radiation caused by the line time base it may be necessary to make multiple connections to the coating. See also 12.

11. METAL RIMBAND

An appreciable capacitance exist between the metal rimband and the internal conductive coating of the tube; its value is quoted in the individual data sheets. To avoid electric shocks, a D.C. connection should be provided between the metal band and the rest of the receiver. In receivers where the chassis can be connected directly to the mains there is a risk of electric shock if acces is made to the metal band. To reduce the shock to the safe limit, it is suggested that a 2 MΩ resistor capable of handling the peak voltages be inserted between the metal band and the point of contact with the external conductive coating. This safety arrangement will provide the necessary insulation from the mains but in the event of flash-over high voltages will be induced on the metal band. It is therefore recommended that the 2 MΩ resistor be bypassed by a 4.7 nF capacitor capable of withstanding the peak voltage determined by the voltage divider formed by this capacitor and the capacitance of the metal rimband to the internal conductive coating.
The 4.7 nF capacitor also serves to reduce the radiation from the band.

12. FLASH-OVER

Picture tubes, in common with other high voltage devices, are prone to internal flash-over. During a breakdown arcing occurs between an electrode connected to the e.h.t. capacitor and an electrode terminated in a pin on the base of the tube. The resulting transient currents and voltages may be of sufficient magnitude to cause damage to the tube itself and to various components on the chassis. Arcing terminates when the e.h.t. capacitor is discharged.
During the subsequent recharging period an additional load is imposed on the e.h.t. generator.
It is of vital importance to provide protective circuits with spark gaps, particularly when semiconductor devices are employed. The spark gaps must be connected as follows:

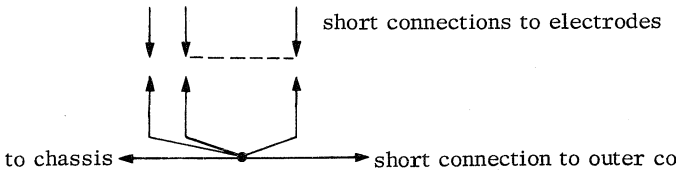

No other connections between the outer conductive coating and the chassis are permissible.
Additional information available on request.

13. HANDLING

The precautions taken in manufacture reduce the possibility of spontaneous implosion to a minimum but any additional stress due to mishandling considerably increases the risk of implosion: such an implosion may occur immediately or may be delayed. Care should be taken not to scratch or bump any part of the bulb, particularly the screen to cone area, as this will appreciably reduce the strength of the bulb and may lead to implosion.

When a tube is not in its equipment or original packing and is placed screen downwards, it should be placed on a soft pad of suitable material free from abrasive substances. Stresses on the neck should be avoided.

Before removing the tube from the equipment the capacitance C_{am} should be discharged via a resistor of approx. 50 kΩ.

The manufacturers notify all concerned that they do not accept any responsibility for any damage on injury sustained in any manner in connection with the picture tube, neither is any condition or warranty given or to be implied.

14. MOUNTING

Unless otherwise specified on the data sheets for individual tubes there are no restrictions on the position of mounting.

With tubes without mounting means the main support should be at the end nearer the screen and so arranged that no stresses are produced in the glass. The tube socket should not be rigidly mounted but should have flexible leads and be allowed to move freely.

The weight of the socket and possible additional circuitry should not be more than 80 g. With tubes with a 7-pin miniature base the socket may not be used for mounting components.

Tubes having all-glass bases must not be soldered direct into the wiring.
It is very desirable that tubes should not be exposed to strong electrostatic and magnetic fields.
No connections should be made to a pin marked i.c.

In front of the face of a mono-panel T.V. picture tube a protecting screen of transparent material should be placed. The screen should be of adequate strength to withstand the effects of an implosion of the tube.
Tubes having integral protection do not require a protective screen.

15. DIMENSIONS

In designing the equipment the tolerances given on the dimensional drawings should be considered. Under no circumstances should the equipment be designed around dimensions taken from individual tubes.

16. REFERENCE LINE

The reference line indicated on the tube outline drawing is determined by means of a gauge.
Drawings of these gauges are given in this book.

17. CORNER CUTTING OR NECK SHADOWING

Corner cutting is caused by a direct interception of the deflected electron beam before it is reaching the screen and results in a non-scanned corner of the raster. It may be avoided by applying an appropriate deflection unit.

18. RASTER CENTRING

To centre the raster on the screen it is recommended that either a magnetic field just behind the deflection coils (viewed from the screen) be used or a direct current be passed through the deflection coils.

The centring device should provide a shift to allow for non-centrality of the spot with respect to the geometric centre of the screen, in addition the centring device should provide the shift needed to allow for non-centrality of the visible raster (i.e. to compensate for line blanking and also time base non-linearity, if any) and the earth magnetic field.
The use of a too strong centring magnetic field should be avoided; this may result in raster distortion and even corner cutting.

RATING SYSTEMS
(in accordance with I.E.C. publication 134)

Absolute maximum rating system

Absolute maximum ratings are limiting values of operating and environmental conditions applicable to any electronic device of a specified type as defined by its published data, which should not be exceeded under the worst probable conditions.

These values are chosen by the device manufacturer to provide acceptable serviceability of the device, taking no responsibility for equipment variations, environmental variations, and the effects of changes in operating conditions due to variations in the characteristics of the device under consideration and of all other electronic devices in the equipment.

The equipment manufacturer should design so that, initially and throughout life, no absolute-maximum value for the intended service is exceeded with any device under the worst probable operating conditions with respect to supply voltage variation, equipment component variation, equipment control adjustment, load variations, signal variation, environmental conditions, and variations in characteristics of the device under consideration and of all other electronic devices in the equipment.

Design-maximum rating system

Design-maximum ratings are limiting values of operating and environmental conditions applicable to a bogey electronic device of a specified type as defined by its published data, and should not be exceeded under the worst probable conditions.

These values are chosen by the device manufacturer to provide acceptable serviceability of the device, taking responsibility for the effects of changes in operating conditions due to variations in the characteristics of the electronic device under consideration.

The equipment manufacturer should design so that, initially and throughout life, no design-maximum value for the intended service is exceeded with a bogey device under the worst probable operating conditions with respect to supply-voltage variation, equipment component variation, variation in characteristics of all other devices in the equipment, equipment control adjustment, load variation, signal variation and environmental conditions.

Design-centre rating system

Design-centre ratings are limiting values of operating and environmental conditions applicable to a bogey electronic device of a specified type as defined by its published data, and should not be exceeded under normal conditions.

These values are chosen by the device manufacturer to provide acceptable serviceability of the device in average applications, taking responsibility for normal changes in operating conditions due to rated supply-voltage variation, equipment component variation, equipment control adjustment, load variation, signal variation, environmental conditions, and variations in the characteristics of all electronic devices.

The equipment manufacturer should design so that, initially, no design-centre value for the intended service is exceeded with a bogey electronic device in equipment operating at the stated normal supply-voltage.

TYPE DESIGNATION

Two type designation systems are currently in use for T.V. Picture tubes.

1. PRO-ELECTRON TYPE DESIGNATION CODE

Single letter, group of figures, hyphen, group of figures, letter or letter group.

The first letter indicates the prime application of the tube:
A- Television display tube for domestic application.
M- Television display tube for professional application-direct view.

First group of figures: Diameter or diagonal of the face in cm.

Second group of figures: Development or design number.

Final letter or letter group: Properties of the phosphor screen.
The first letter denotes the colour of the fluorescence, the second letter, if any, other specific differences in screen properties.
W- White screen for T.V. display tubes.
X- Three-colour screen fot T.V. display tubes.

Example A63-120X

A	63	120	X
T.V. display tube for domestic application	Face diagonal (63 cm)	Development or design number	Three-colour screen

OLD SYSTEM

Two letters, group of figures, hyphen, group of figures.

First letter: Method of focusing and deflection:

A-Electrostatic focusing and magnetic deflection.
M-Electromagnetic focusing and electromagnetic deflection.

Second letter: Properties of phosphor screen. (see above).

First group of figures: Diameter or diagonal of face in cm.

Second group of figures: Development or design number.

SCREEN PHOSPHORS

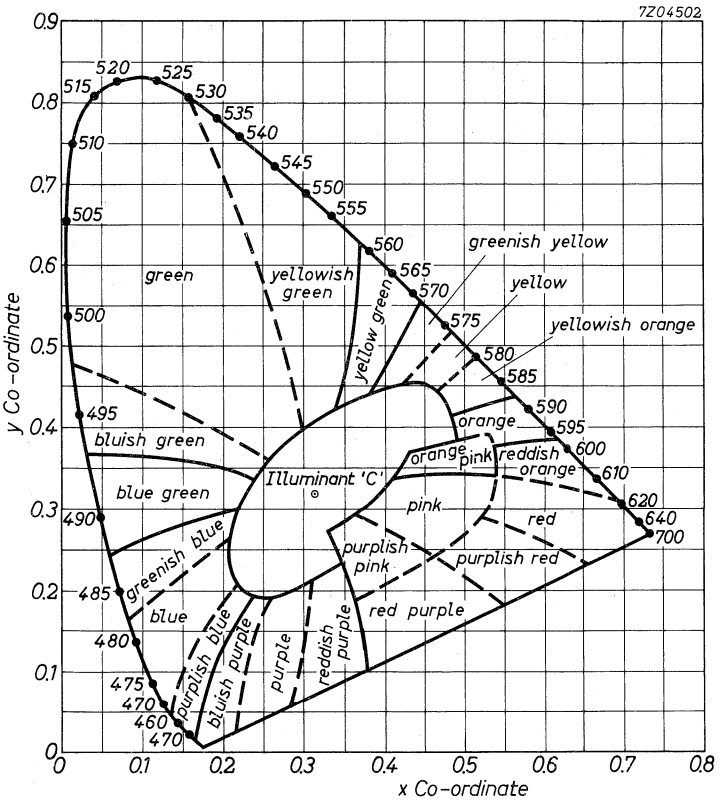

Kelly Chart

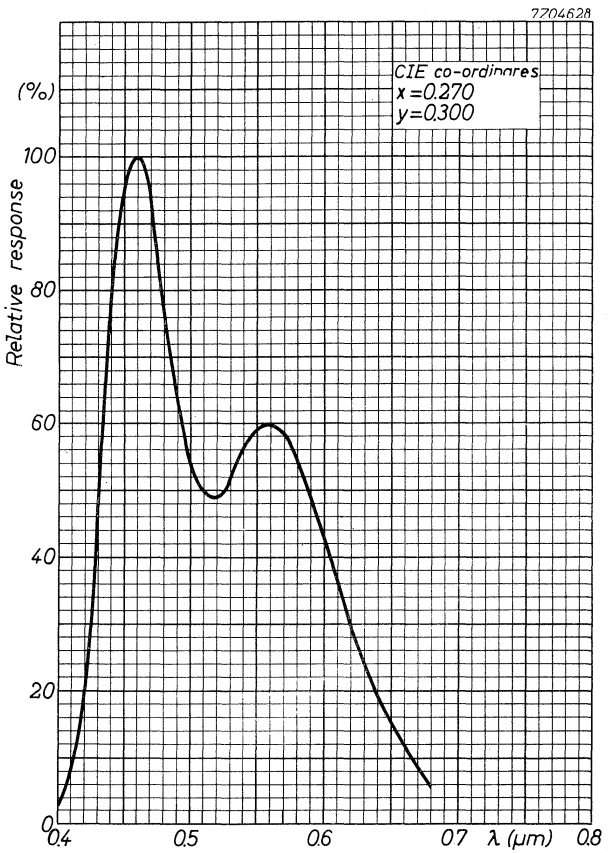
7704628
CIE co-ordinates
x=0.270
y=0.300
(%)
100
80
60
40
20
0
Relative response
0.4
0.5
0.6
0.7
λ (μm)
0.8

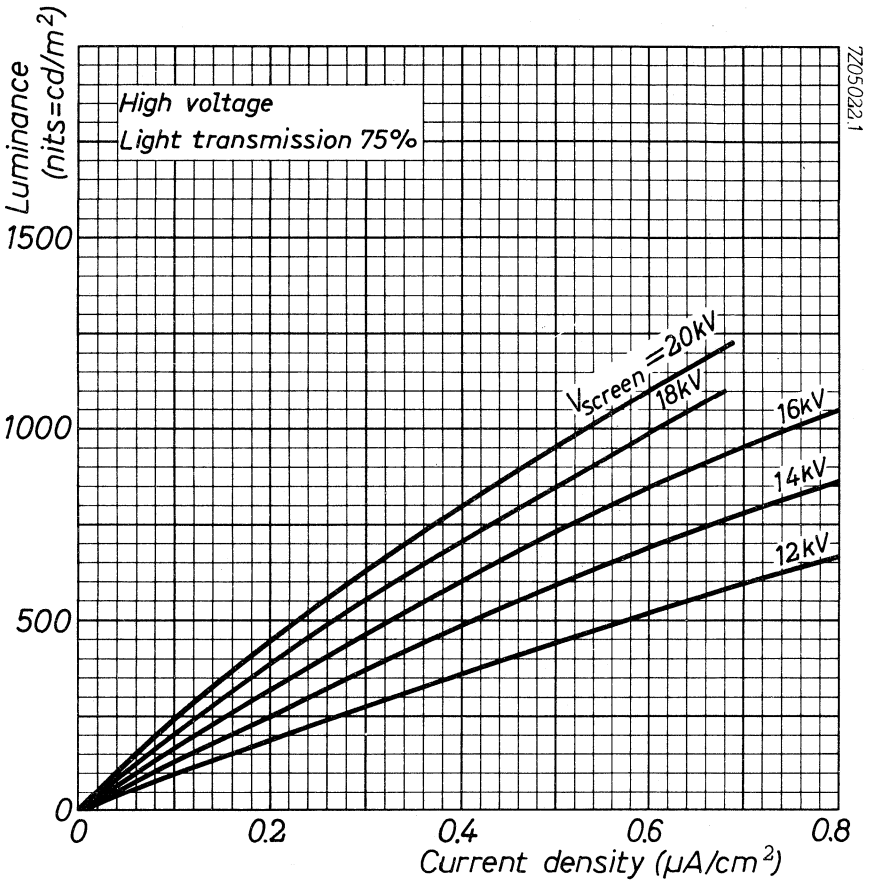
Luminance (nits=cd/m²)
High voltage
Light transmission 75%
1500
1000
500
0
0
0.2
0.4
0.6
0.8
Current density (μA/cm²)
V screen = 20kV
18kV
16kV
14kV
12kV
72050223.1

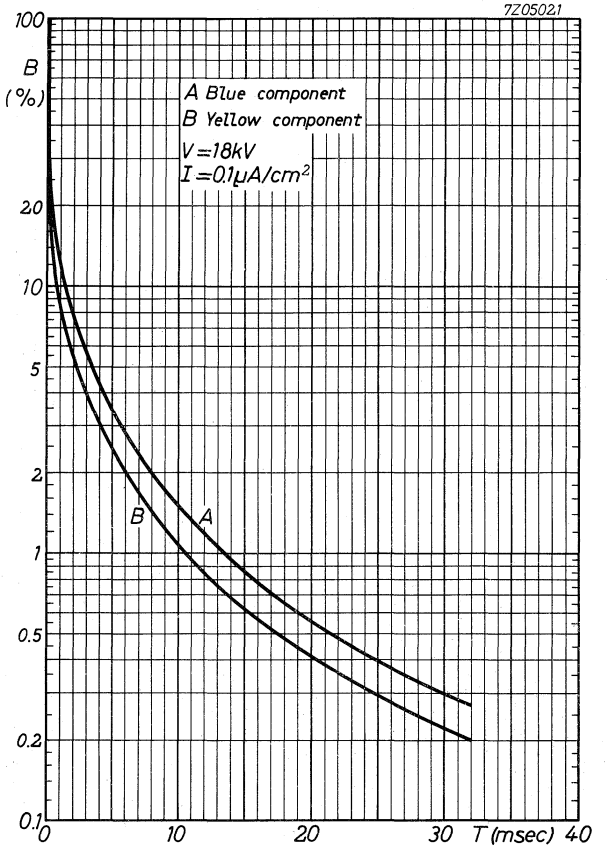
7Z05021
100
B
(%)
A Blue component
B Yellow component
V=18kV
I=0.1μA/cm²
20
10
5
2
1
0.5
0.2
0.1
B
A
0
10
20
30
T (msec)
40

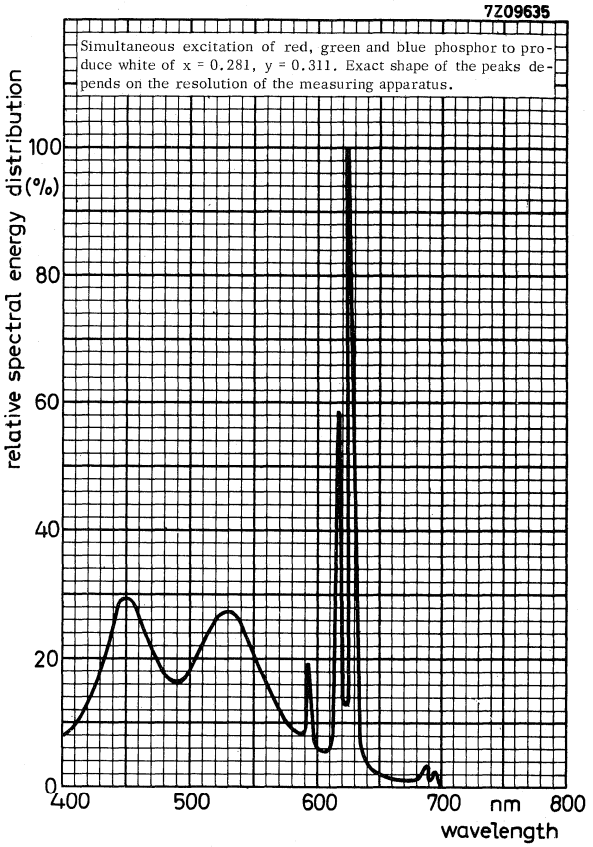

Colour coordinates

	x	y
red	0.630	0.340
green	0.315	0.600
blue	0.150	0.060

REFERENCE LINE GAUGES

REFERENCE LINE GAUGE A

Dimensions in mm

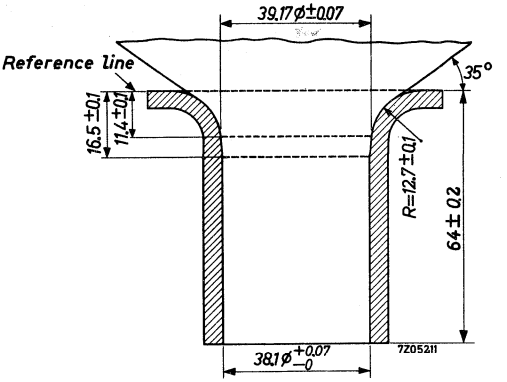

Reference line gauge for 70° deflection angle.

REFERENCE LINE GAUGE B (IEC67-IV-2) Dimensions in mm

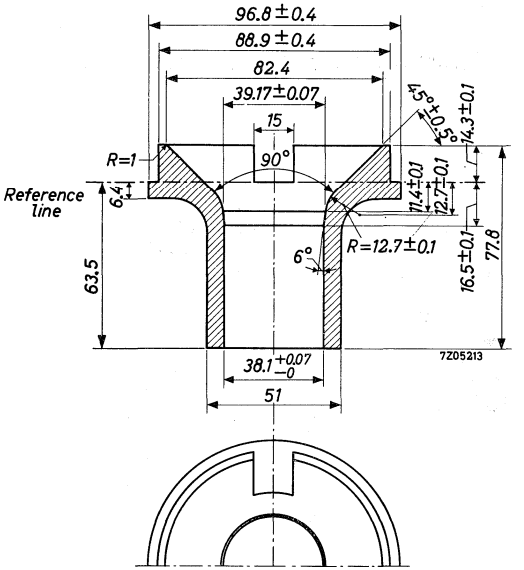

Reference line gauge for 90° deflection angle.

REFERENCE LINE GAUGE C (JEDEC 126) (IEC67-IV-3) Dimensions in mm

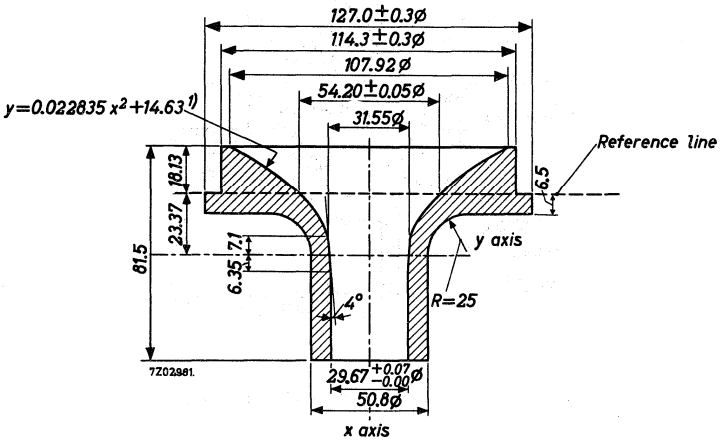

If x and y are expressed in inches, the parabolic formula for the inner contour reads $y = 0.58\ x^2 + 0.576$

Reference line gauge for 110° deflection angle.

REFERENCE LINE GAUGE D

Dimensions in mm

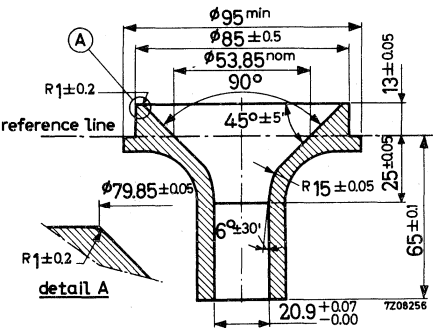

Reference line gauge for 90° deflection angle

REFERENCE LINE GAUGE E

Dimensions in mm

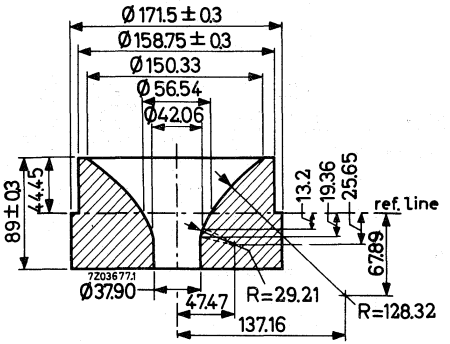

Reference line gauge for 90° deflection angle colour tubes

REFERENCE LINE GAUGE F

Dimensions in mm

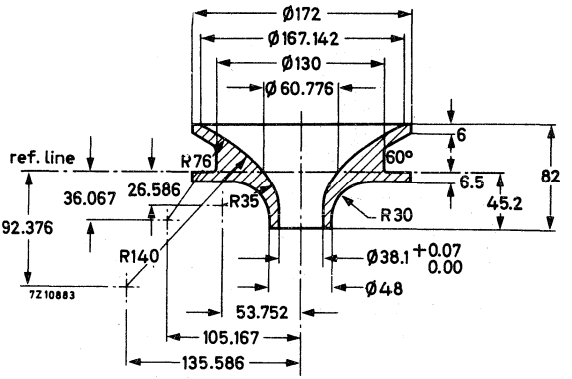

Reference line gauge for 110° deflection angle colour tubes

REFERENCE LINE GAUGE G

Dimensions in mm

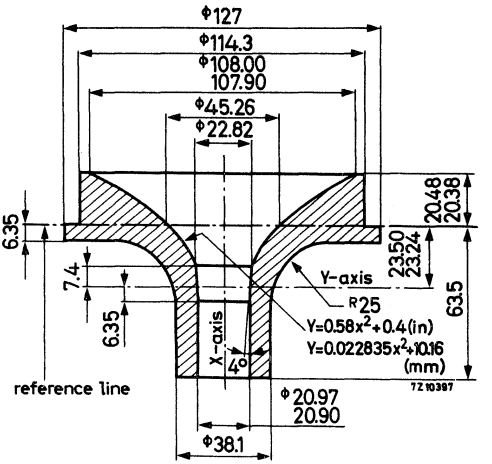

Reference line gauge for 110° deflection angle

BASES

SMALL-BUTTON EIGHTAR BASE JEDEC B7-183 Dimensions in mm

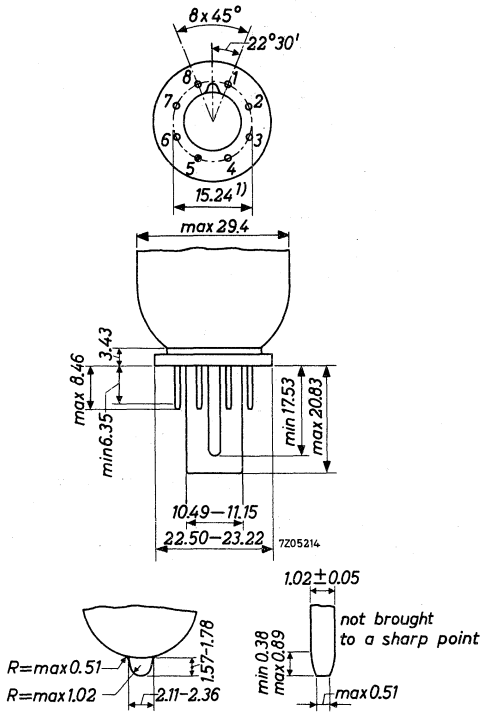

---

1) Base-pin positions are held to tolerances such that the base will fit a flat-plate gauge having a thickness of 9.53 and eight equally spaced holes of 1.40 ± 0.01 diameter located on a 15.24 ± 0.01 diameter circle.
The gauge is also provided with a center hole to provide 0.25 diametric clearance for the lug and key. Pin fit in the gauge shall be such that the entire length of pins will, without undue force, enter into and disengage from the gauge.

2) This dimension around the periphery of any individual pin may vary within the limits shown.

SMALL-BUTTON NEO-EIGHTAR BASE IEC 67-I-31 Dimensions in mm
JEDEC B7-208

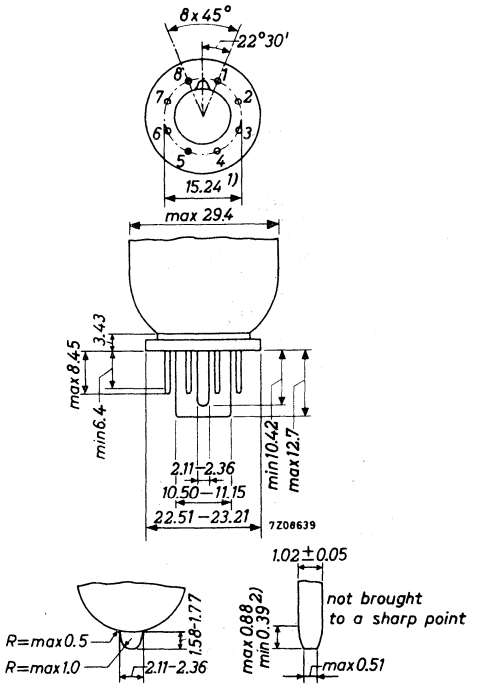

1) Base-pin positions are held to tolerances such that the base will fit a flat-plate gauge having a thickness of 9.53 and eight equally spaced holes of 1.40 ± 0.01 diameter located on a 15.24 ± 0.01 diameter circle.
The gauge is also provided with a center hole to provide 0.25 diametric clearance for the lug and key. Pin fit in the gauge shall be such that the entire length of pins will, without undue force, enter into and disengage from the gauge.

2) This dimension may vary within the limits shown around the periphery of any individual pin.

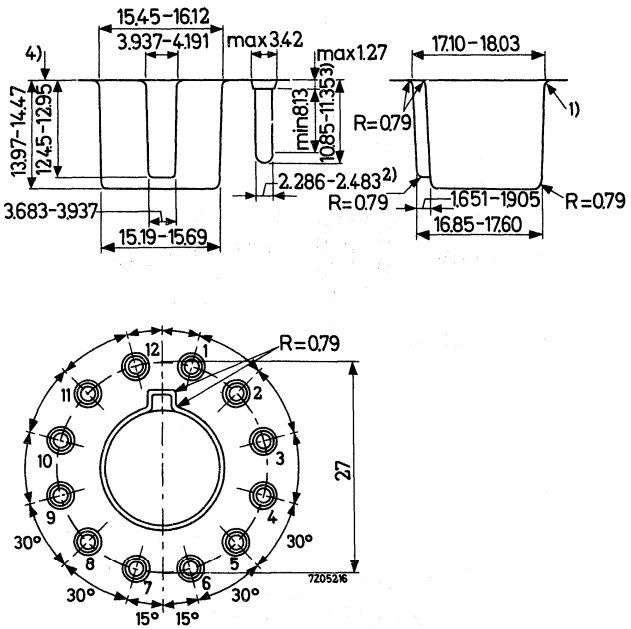

It should be noted that the vertical dimensions are referred to the underside of a base as differentiated from past practice in this standard of dimensioning from the outer rim.

---

1) Underside of base

2) Not including increase in pin diameter due to solder.

3) This dimension may be increased by 0.030" (0.76 mm) max. for solder.

4) Any projection on the under-surface of the base other than these shown, such as a rim or external barriers, have a height not exceeding 0.0065" (1.65 mm).

7 PIN MINIATURE BASE WITH PUMPING STEM

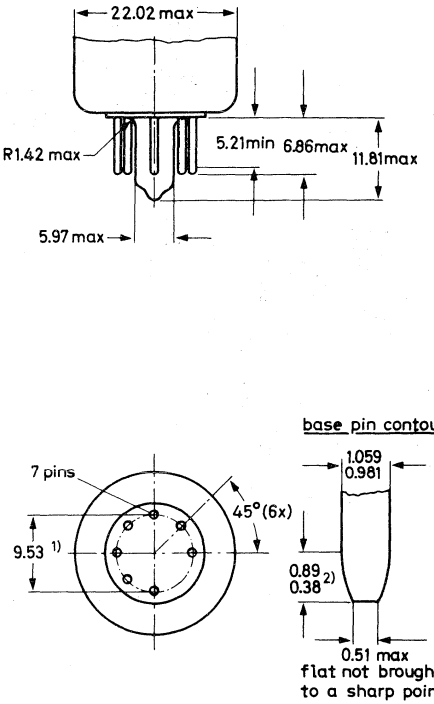

1) Base-pin and pumping stem positions are held to tolerances such that entire length of pins and stem will without undue force pay into and disengage from a flat-plate gauge having a thickness of 6.35 mm and eight holes with diameters of 1.27 ± 0.013 mm so located on a 9.525 ± 0.013 mm diameter circle that the distance along the chord between any two adjacent hole centres is 3.645 ± 0.013 mm and a centre hole of $5.97 + 0.025$ mm being chamfered at the top over 1.52 mm with an angle of 45 degrees.

2) This dimensions around the periphery of any individual pin may vary within the limits shown.

12 PIN BASE IEC 67-I.., JEDEC B12-246

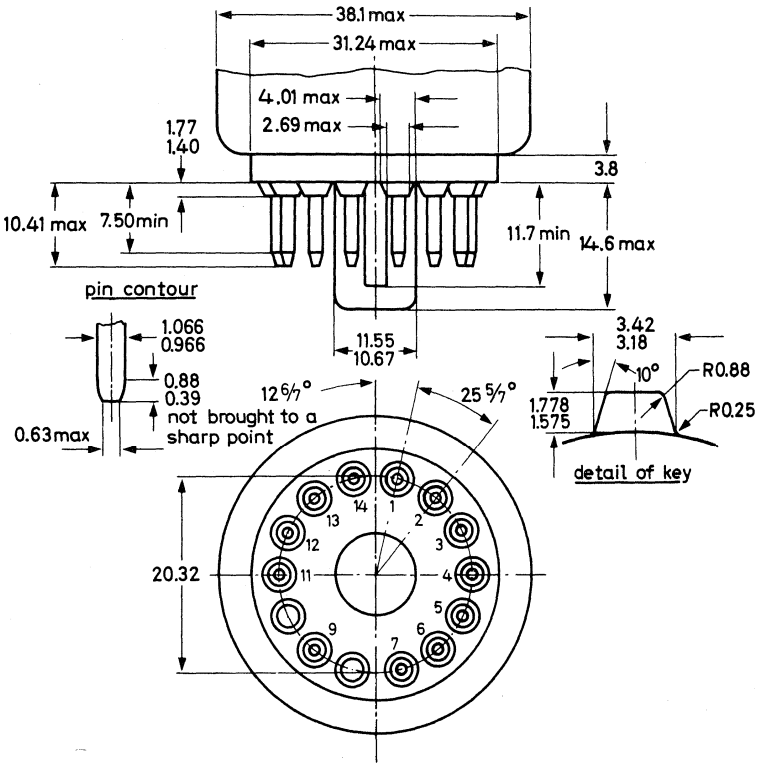

T.V. PICTURE TUBE

Replacement type A28-14W

T.V. PICTURE TUBE

28 cm (11 inch), 90°, rectangular direct vision picture tube with integral protection for black and white T.V.

QUICK REFERENCE DATA		
Face diagonal	28	cm (11 inch)
Deflection angle	90°	
Overall length	245	mm
Neck diameter	20	mm
Light transmission of face glass	50	%
Focusing		electrostatic
Bulb		reinforced
Heating	11 V, 75	mA

SCREEN

Metal backed phosphor

Luminescence	white		
Light transmission of face glass		50	%
Useful diagonal	min.	262.5	mm
Useful width	min.	228	mm
Useful height	min.	171	mm

HEATING

Indirect by A.C. or D.C.; parallel supply

Heater voltage	V_f	11	V
Heater current	I_f	75	mA

The maximum total deviation from the nominal heater voltage is 15%. The deviation may consist of:

max. 7% continuous deviation, e.g. due to component spread,

max. 10% temporary variation

In case of supply direct from a battery, the heater voltage must be within the limits given on page 9 above.

MECHANICAL DATA

Dimensions in mm

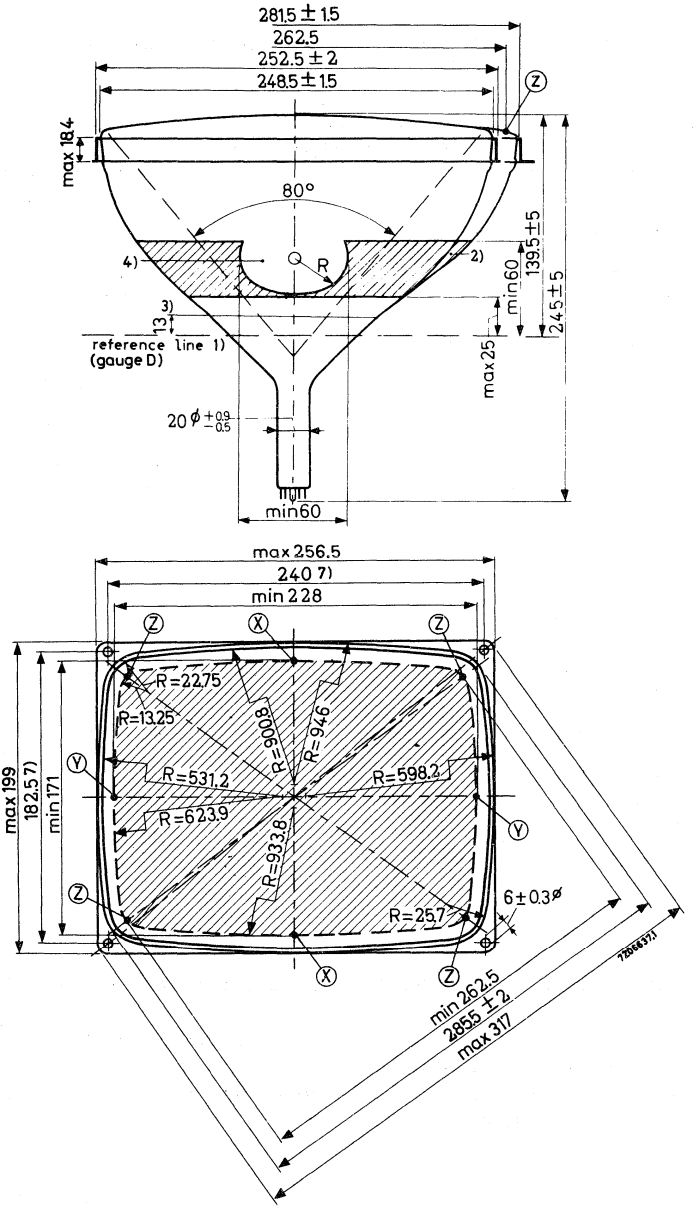

MECHANICAL DATA (continued)

Dimensions in mm

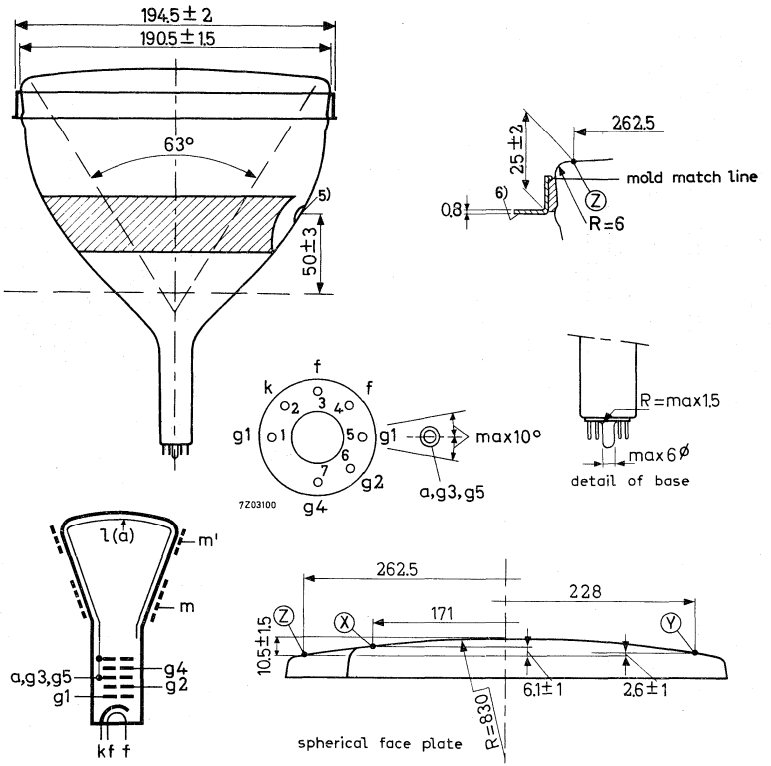

Mounting position: any

Base : 7 pins miniature, with pumping stem

Net weight : approx. 2.2 kg

The socket for the base should not be rigidly mounted; it should have flexible leads and be allowed to move freely.

For notes see page 5

MAXIMUM CONE CONTOUR DRAWING (Dimensions in mm)

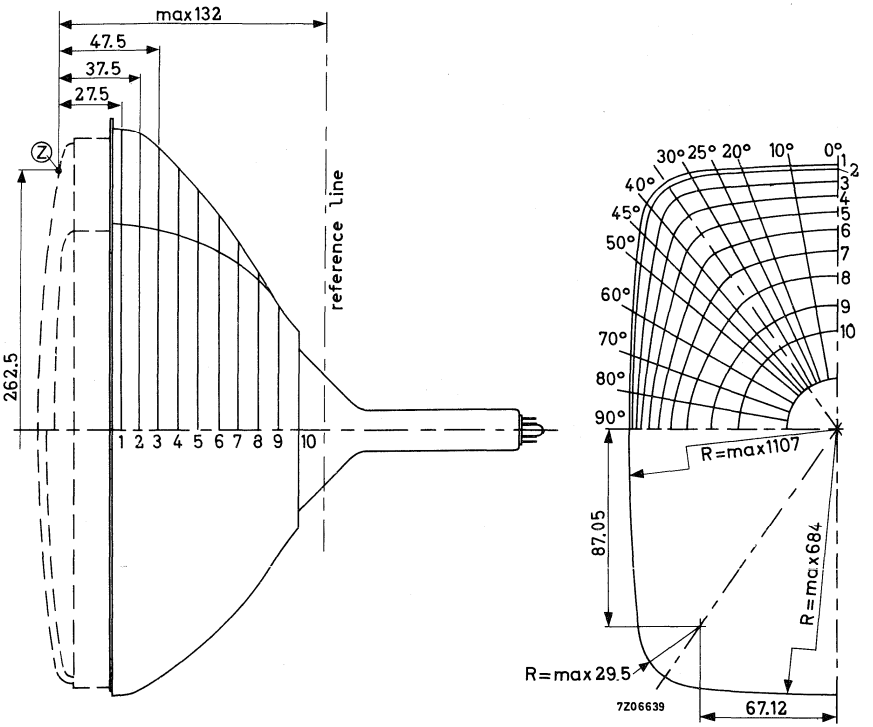

Section	Nom. distance from point Z	Distance from centre (max. values)												
		Long axis 0°	10°	20°	25°	30°	34°40° Diag.	40°	45°	50°	60°	70°	80°	Short axis 90°
1	27.5	130.00	131.62	136.64	140.59	145.50	147.50	144.87	136.81	127.86	114.90	106.84	102.41	101.00
2	37.5	127.35	128.90	133.85	137.70	142.40	144.90	141.80	133.30	124.85	112.60	105.15	101.15	99.90
3	47.5	121.10	122.60	126.85	130.45	134.70	137.55	133.90	125.55	118.45	108.25	102.00	98.95	97.90
4	57.5	114.05	115.15	118.70	121.65	125.25	127.30	124.50	117.50	111.55	103.10	98.10	95.75	95.20
5	67.5	106.35	107.20	110.00	112.25	114.85	116.40	114.25	108.85	104.00	97.20	93.50	92.00	91.75
6	77.5	97.60	98.25	100.05	101.45	103.30	104.45	102.80	98.80	95.10	90.00	87.45	86.85	86.95
7	87.5	87.40	87.75	88.85	89.70	90.70	91.40	90.25	87.70	85.15	81.70	80.40	80.50	81.00
8	97.5	75.05	75.35	76.15	76.70	76.95	76.85	76.05	74.90	73.85	72.45	72.15	72.75	73.40
9	107.5	60.65	60.65	60.65	60.65	60.65	60.65	60.65	60.55	60.35	60.20	60.60	61.00	61.35
10	117.5	48.00	48.00	48.00	48.00	48.00	48.00	48.00	48.00	48.00	48.00	48.00	48.00	48.00

CAPACITANCES

Final accelerator to external conductive coating	$C_{a, g_3, g_5/m}$	< 850 pF > 550 pF
Final accelerator to metal band	$C_{a, g_3, g_5/m}$	150 pF
Cathode to all	C_k	3 pF
Grid No.1 to all	C_{g_1}	7 pF

FOCUSING electrostatic

DEFLECTION magnetic

Diagonal deflection angle	90°
Horizontal deflection angle	80°
Vertical deflection angle	63°

PICTURE CENTRING MAGNET

Field intensity perpendicular to the tube axis adjustable from 0 to 800 A/m (0 to 10 Oerstedt).
Maximum distance between centre of field of this magnet and reference line: 55mm. The centring magnet should be mounted as close to the deflection coils as possible.

NOTES TO OUTLINE DRAWING

1. The reference line is determined by the plane of the upper edge of the flange of the reference line gauge when the gauge is resting on the cone. Reference line gauge D.
2. The configuration of the external conductive coating is optional but contains the contact area shown in the drawing.
   The external conductive coating must be earthed.
3. End of guaranteed contour. The maximum neck and cone contour is given by the reference line gauge D.
4. This area must be kept clean.
5. Recessed cavity contact.
6. Maximum unflatness of the rim is 1 mm.
7. The mounting screws in the cabinet must be situated inside a circle with a diameter of 5mm drawn around the corner points of a geometrical rectangle of 240 mm x 182.5 mm.

TYPICAL OPERATING CONDITIONS

Grid drive service

Final accelerator voltage	V_{a,g_3,g_5}	11	kV
Focusing electrode voltage	V_{g_4}	0 to 350	V [1]
Grid No.2 voltage	V_{g_2}	250	V
Grid No.1 voltage for visual extinction of focused raster	V_{g_1}	-35 to -69	V

Cathode drive service

Voltages are specified with respect to grid No.1

Final accelerator voltage	V_{a,g_3,g_5}	11	kV
Focusing electrode voltage	V_{g_4}	0 to 350	V [1]
Grid No.2 voltage	V_{g_2}	200 to 350	V
Cathode voltage for visual extinction of focused raster	V_k	approx. 45	V

LIMITING VALUES (Design centre rating system, unless otherwise stated)

Final accelerator voltage	V_{a,g_3,g_5}	max.	12	kV
		min.	7.5	kV [2]
Grid No.4 voltage				
positive	V_{g_4}	max.	500	V
negative	$-V_{g_4}$	max.	50	V
Grid No.2 voltage	V_{g_2}	max.	350	V
		min.	200	V
Grid No.2 to grid No.1 voltage	V_{g_2}/V_{g_1}	max.	450	V
Grid No.1 voltage				
positive	V_{g_1}	max.	0	V
positive peak	$V_{g_{1p}}$	max.	2	V
negative	$-V_{g_1}$	max.	100	V
negative peak	$-V_{g_{1p}}$	max.	350	V [3]

1) Voltage range to obtain optimum overall focus at 100 μA beam current.
2) Absolute maximum rating system.
3) Maximum pulse duration 22% of a cycle but max. 1.5 ms.

LIMITING VALUES (continued)

Cathode to grid No.1 voltage			
positive	V_{k/g_1}	max. 100	V
positive peak	$V_{k/g_{1p}}$	max. 350	V [1]
negative	$-V_{k/g_1}$	max. 0	V
negative peak	$-V_{k/g_{1p}}$	max. 2	V
Cathode to heater voltage			
positive	$V_{k/f}$	max. 110	V
positive peak	V_{k/f_p}	max. 130	V

CIRCUIT DESIGN VALUES

Grid No.4 current			
positive	I_{g_4}	max. 25	μA
negative	$-I_{g_4}$	max. 25	μA
Grid No.2 current			
positive	I_{g_2}	max. 5	μA
negative	$-I_{g_2}$	max. 5	μA

MAXIMUM CIRCUIT VALUES

Resistance between cathode and heater	$R_{k/f}$	max. 1	MΩ
Impedance between cathode and heater	$Z_{k/f}$ (50 Hz)	max. 0.1	MΩ
Grid No.1 circuit resistance	R_{g_1}	max. 1.5	MΩ
Grid No.1 circuit impedance	Z_{g_1} (50 Hz)	max. 0.5	MΩ
Resistance between external conductive coating and rimband	$R_{m/m'}$	max. 2	MΩ

[1]) Maximum pulse duration 22% of a cycle but max. 1.5 ms.

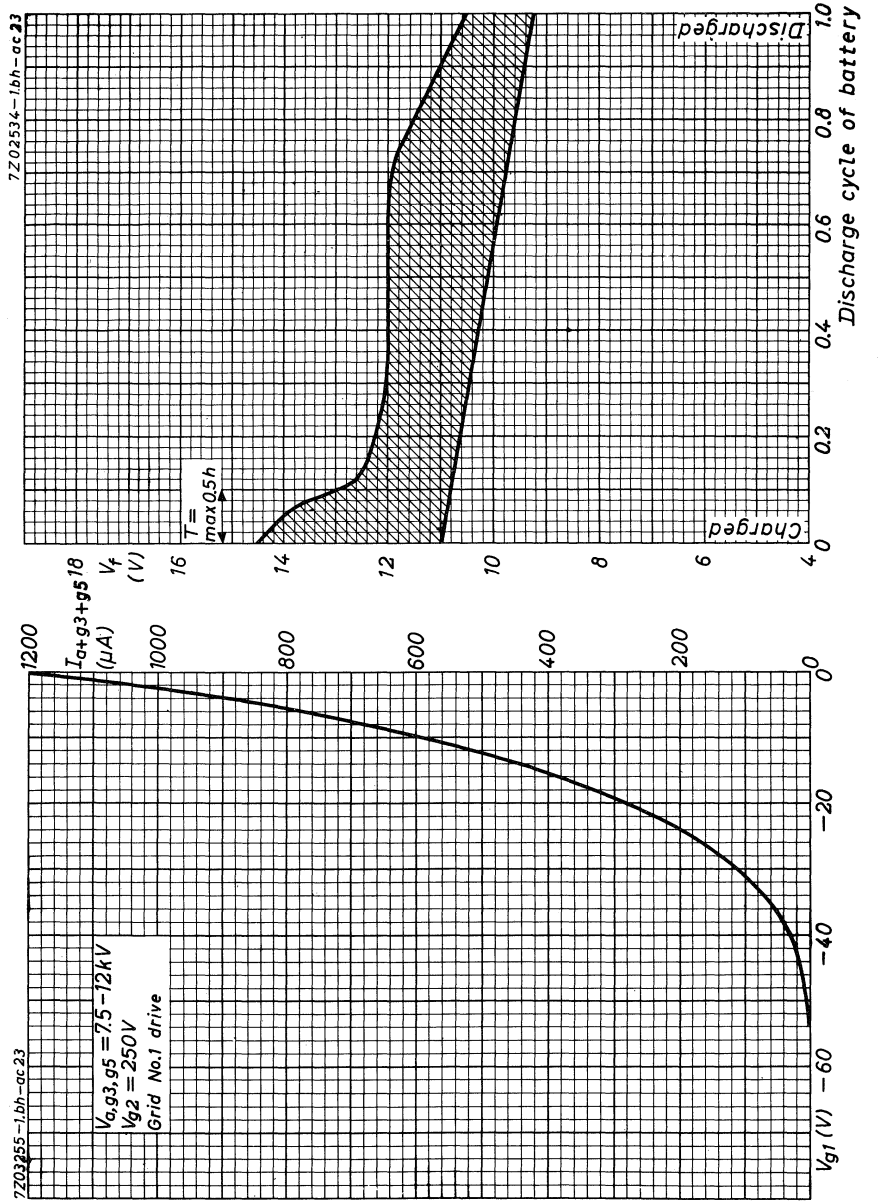
7Z02534-1bh-ac23
Discharged
Charged
Discharge cycle of battery
0
0.2
0.4
0.6
0.8
1.0
T = max 0.5h
V_f (V)
16
14
12
10
8
6
4
7Z03255-1.bh-ac23
$V_{a,g3,g5} = 7.5-12kV$
$V_{g2} = 250V$
Grid No.1 drive
$I_{a+g3+g5}$ (μA)
1200
1000
800
600
400
200
0
−20
−40
−60
V_{g1} (V)

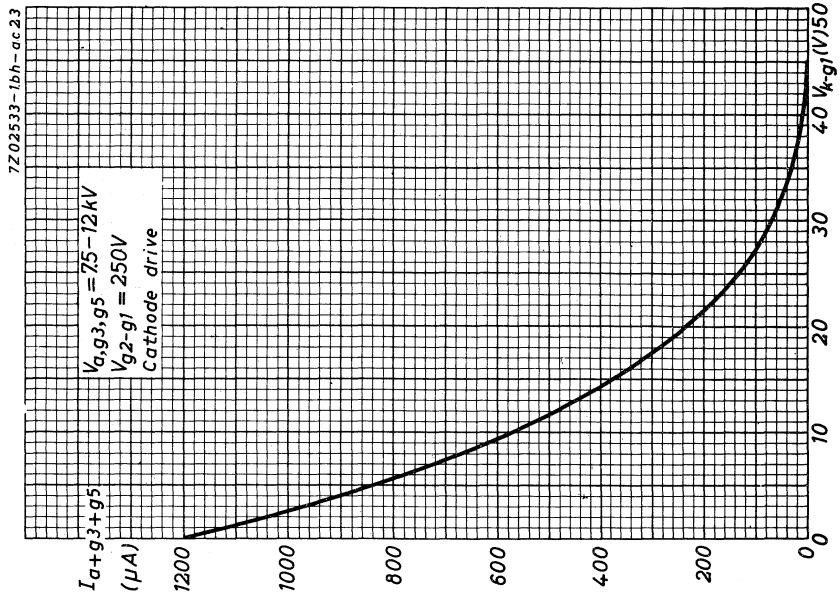
7Z02533-1bh-ac23
$V_a,g3,g5 = 75-12kV$
$V_{g2-g1} = 250V$
Cathode drive
$I_{a+g3+g5}$ (μA)
1200
1000
800
600
400
200
0
0
10
20
30
40
V_{k-g1}(V)50

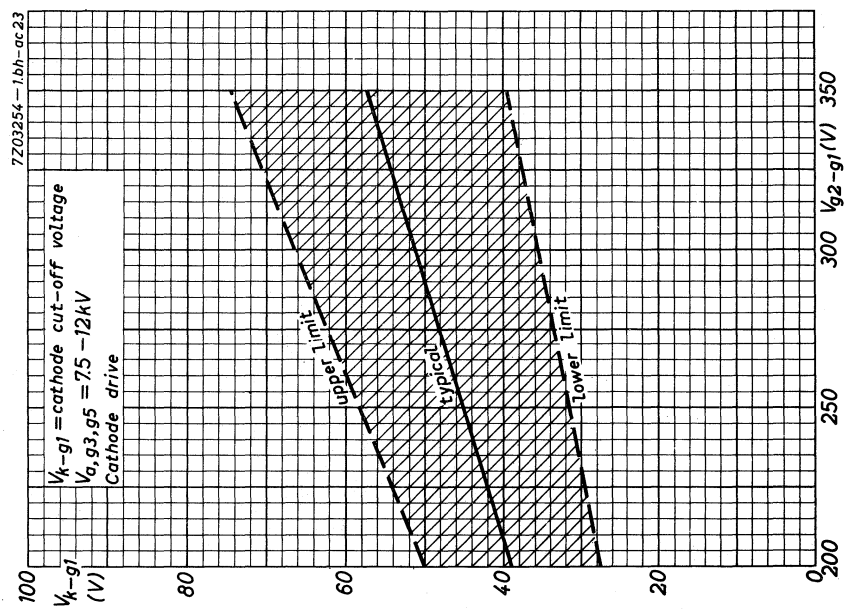
7Z03254-1bh-ac23
V_{k-g1} = cathode cut-off voltage
$V_a,g3,g5 = 75-12kV$
Cathode drive
V_{k-g1} (V)
100
80
60
40
20
0
200
250
300
V_{g2-g1}(V) 350
upper Limit
typical
lower Limit

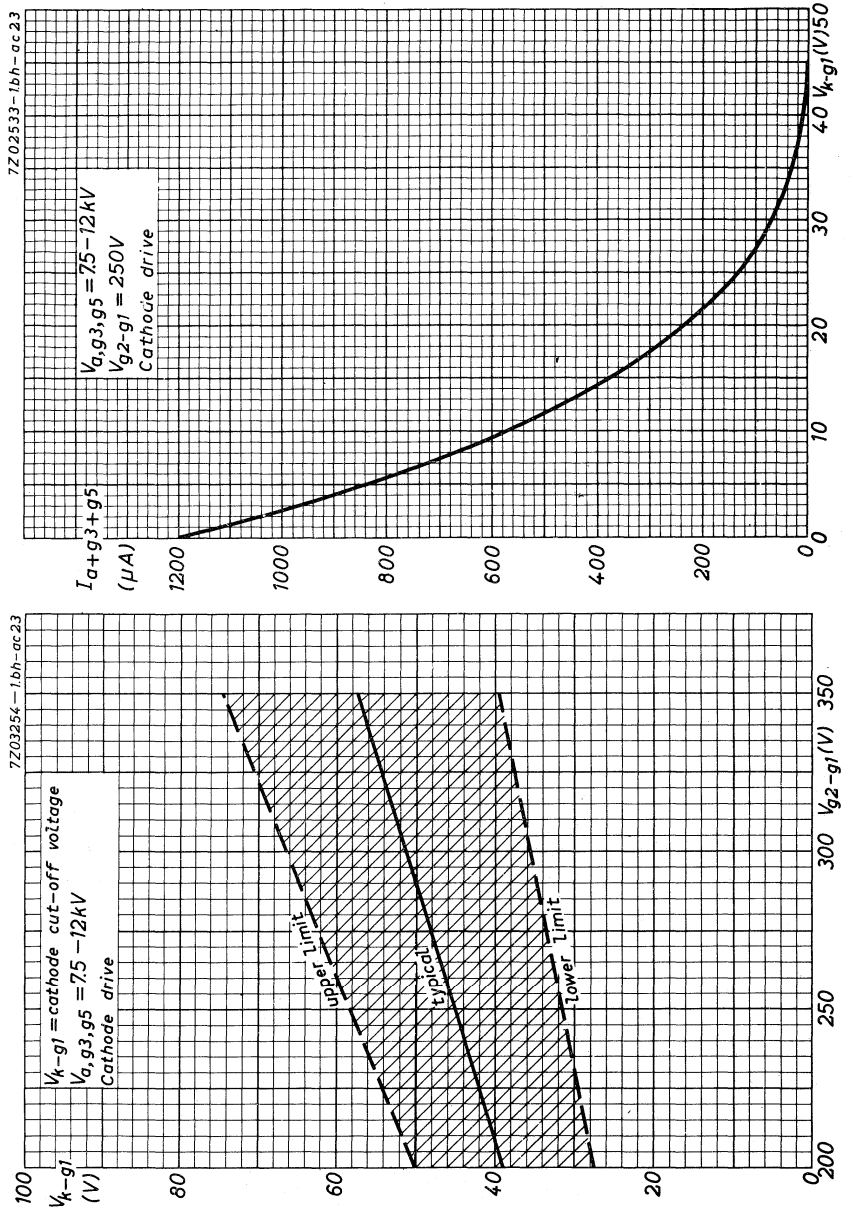
7Z02533-1bh-ac23
$I_{a+g3+g5}$ (μA)
$V_{a,g3,g5}$ = 7.5-12kV
V_{g2-g1} = 250V
Cathode drive
1200
1000
800
600
400
200
0
0
10
20
30
40 V_{k-g1}(V)50
7Z03254-1bh-ac23
V_{k-g1} = cathode cut-off voltage
$V_{a,g3,g5}$ = 7.5-12kV
Cathode drive
V_{k-g1} (V)
100
80
60
40
20
0
200
250
300 V_{g2-g1}(V) 350
Upper Limit
typical
Lower Limit

T.V. PICTURE TUBE

31 cm (12 inch), 90°, rectangular direct vision picture tube with integral protection for black- and white T.V. The rimband leaves the edge of the faceplate free.

QUICK REFERENCE DATA	
Face diagonal	31 cm (12 inch)
Deflection angle	90°
Overall length	272 mm
Neck diameter	20 mm
Light transmission of face glass	54 %
Focusing	electrostatic
Bulb	reinforced
Heating	11 V, 75 mA

SCREEN

Metal backed phosphor			
Luminescence	white		
Light transmission of face glass		54	%
Useful diagonal	min.	295	mm
Useful width	min.	257	mm
Useful height	min.	195	mm

HEATING

Indirect by A.C. or D.C.; parallel supply

Heater voltage	V_f	11	V
Heater current	I_f	75	mA ←

The maximum total deviation from the nominal heater voltage is 15%.
The deviation may consists of:
max. 7% continuous deviation, e.g. due to component spread,
max. 10% temporary variation.
In case of supply direct from a battery, the heater voltage must be within the limits given on page 7.

MECHANICAL DATA

Dimensions in mm

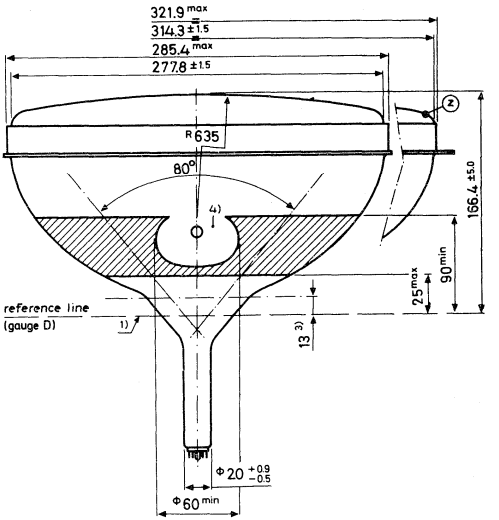

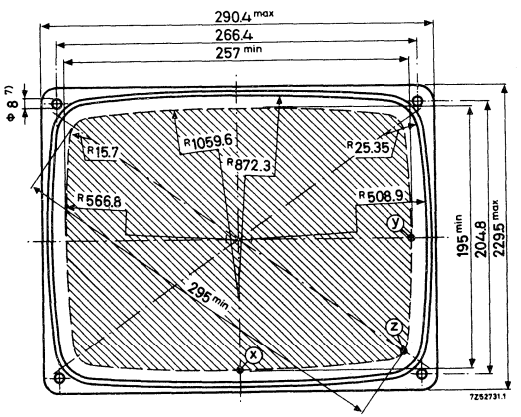

MECHANICAL DATA

Dimensions in mm

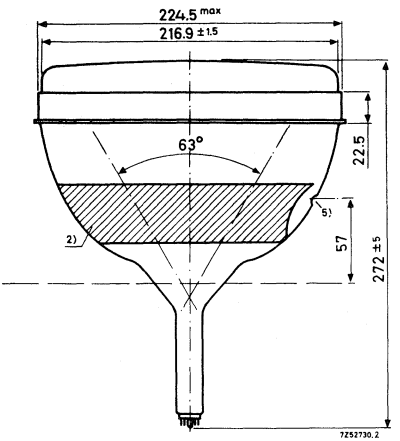

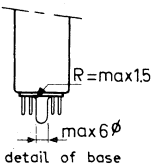

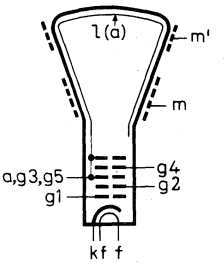

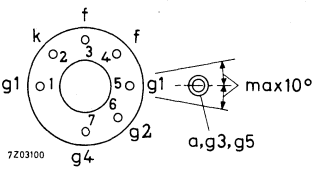

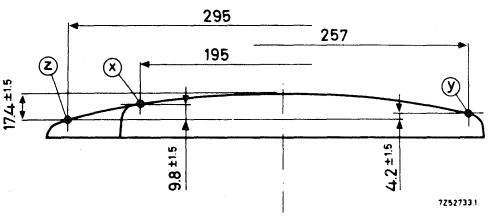

spherical face plate

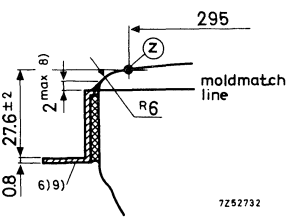

Mounting position: any

Net weight : approx. 2.9 kg

Base : 7 pins miniature, with pumping stem

The socket for the base should not be rigidly mounted, it should have flexible leads and be allowed to move freely.

Notes see page 4

NOTES TO OUTLINE DRAWING

1. The reference line is determined by the plane of the upper edge of the flange of the reference line gauge D when the gauge is resting on the cone.
2. The configuration of the external conductive coating may be different but contains the contact area shown in the drawing.
   The external conductive coating must be earthed.
3. End of guaranteed contour. The maximum neck and cone contour is given by the reference line gauge D.
4. This area must be kept clean.
5. Recessed cavity contact I.E.C. 67-III-2.
6. Maximum unflatness of the rim is 1.2 mm.
7. The mounting screws in the cabinet must be situated inside a circle of 6 mm diameter drawn around the true geometrical positions, i.e. at the corners of a rectangle of 266.4 mm x 204.8 mm.
8. Meniscus of resin filler.
9. The metal rimband must be earthed.

CAPACITANCES

Final accelerator to external conductive coating	$C_{a,g_3,g_5/m}$	<	1300	pF
		>	900	pF
Final accelerator to metal band	$C_{a,g_3,g_5/m'}$		170	pF
Cathode to all	C_k		3	pF
Grid No.1 to all	C_{g_1}		7	pF

FOCUSING electrostatic

DEFLECTION magnetic

Diagonal deflection angle	90°
Horizontal deflection angle	80°
Veryical deflection angle	63°

PICTURE CENTRING MAGNET

Field intensity perpendicular to the tube axis adjustable from 0 to 800 A/m (0 to 10 Oerstedt).
Maximum distance between centre of field of this magnet and reference line: 55 mm.

TYPICAL OPERATING CONDITIONS

Grid drive service

Final accelerator voltage	V_{a,g_3,g_5}	11	kV
Focusing electrode voltage	V_{g_4}	250	V [1]
Grid No.2 voltage	V_{g_2}	250	V
Grid No.1 voltage for visual extinction of focused raster	V_{g_1}	-35 to -69	V

Cathode drive service

Voltages are specified with respect to grid No.1

Final accelerator voltage	V_{a,g_3,g_5}	11	kV
Focusing electrode voltage	V_{g_4}	250	V [1]
Grid No.2 voltage	V_{g_2}	200 to 350	V
Cathode voltage for visual extinction of focused raster	V_k	approx. 45	V

[1] Individual tubes will have optimum focus at some value between 0 V and 350 V.

LIMITING VALUES (Design centre rating system, unless otherwise stated)

Final accelerator voltage	$V_{a,g3,g5}$	max.	12	kV
		min.	7.5	kV [1]
Grid No.4 voltage				
positive	V_{g_4}	max.	500	V
negative	$-V_{g_4}$	max.	50	V
Grid No.2 voltage	V_{g_2}	max.	350	V
		min.	200	V
Grid No.2 to grid No.1 voltage	V_{g_2/g_1}	max.	450	V
Cathode to grid No.1 voltage				
positive	V_{k/g_1}	max.	100	V
positive peak	$V_{k/g_{1p}}$	max.	350	V [2]
negative	$-V_{k/g_1}$	max.	0	V
negative peak	$-V_{k/g_{1p}}$	max.	2	V
Cathode to heater voltage				
positive	$V_{k/f}$	max.	110	V
positive peak	V_{k/f_p}	max.	130	V

CIRCUIT DESIGN VALUES

Grid No.4 current				
positive	I_{g_4}	max.	25	μA
negative	$-I_{g_4}$	max.	25	μA
Grid No.2 current				
positive	I_{g_2}	max.	5	μA
negative	$-I_{g_2}$	max.	5	μA

MAXIMUM CIRCUIT VALUES

Resistance between cathode and heater	$R_{k/f}$	max.	1	MΩ
Impedance between cathode and heater	$Z_{k/f}$ (50 Hz)	max.	0.1	MΩ
Grid No.1 circuit resistance	R_{g_1}	max.	1.5	MΩ
Grid No.1 circuit impedance	Z_{g_1} (50 Hz)	max.	0.5	MΩ
Resistance between external conductive coating and rimband	$R_{m/m'}$	min.	2	MΩ

[1]) Absolute maximum rating system.
[2]) Maximum pulse duration 22% of a cycle but max. 1.5 ms.

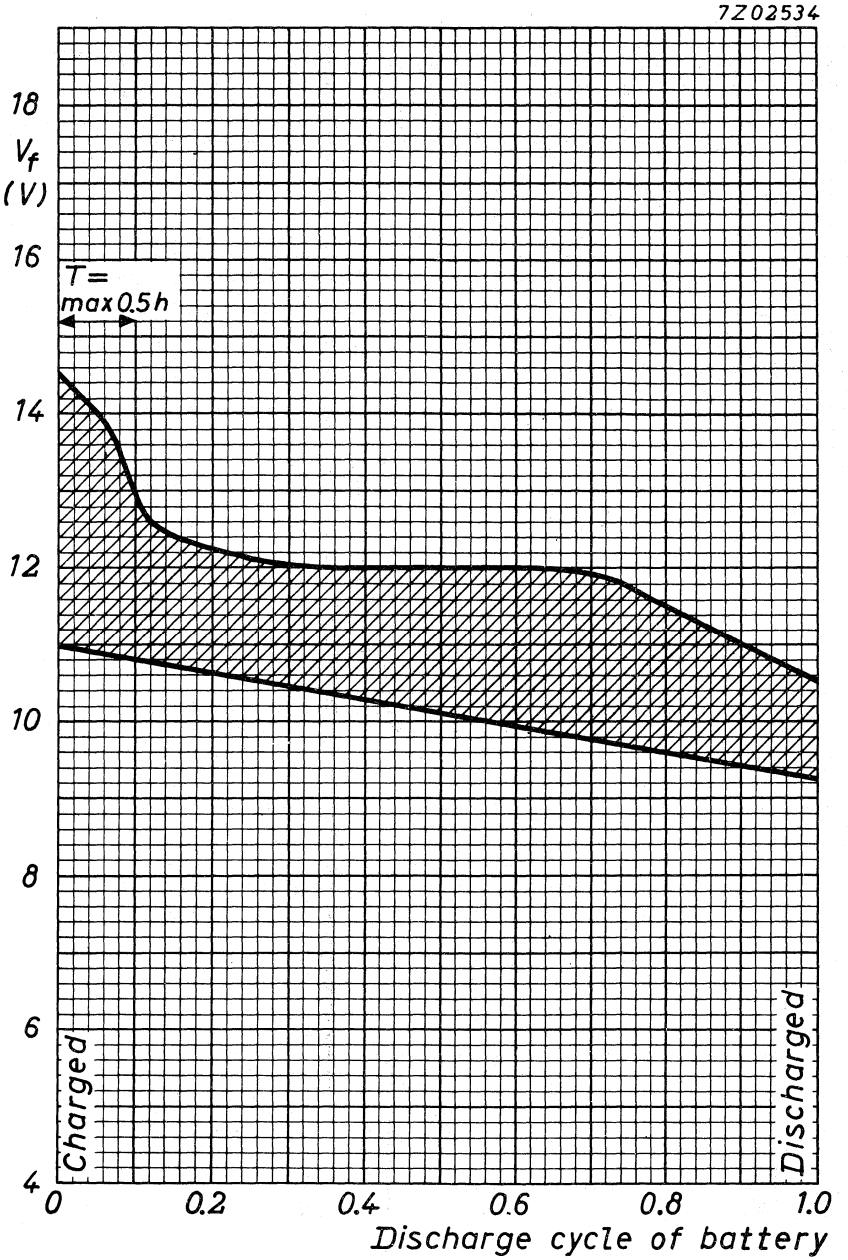
7Z02534
18
V_f
(V)
16
T=
max 0.5h
14
12
10
8
6
4
Charged
Discharged
0
0.2
0.4
0.6
0.8
1.0
Discharge cycle of battery

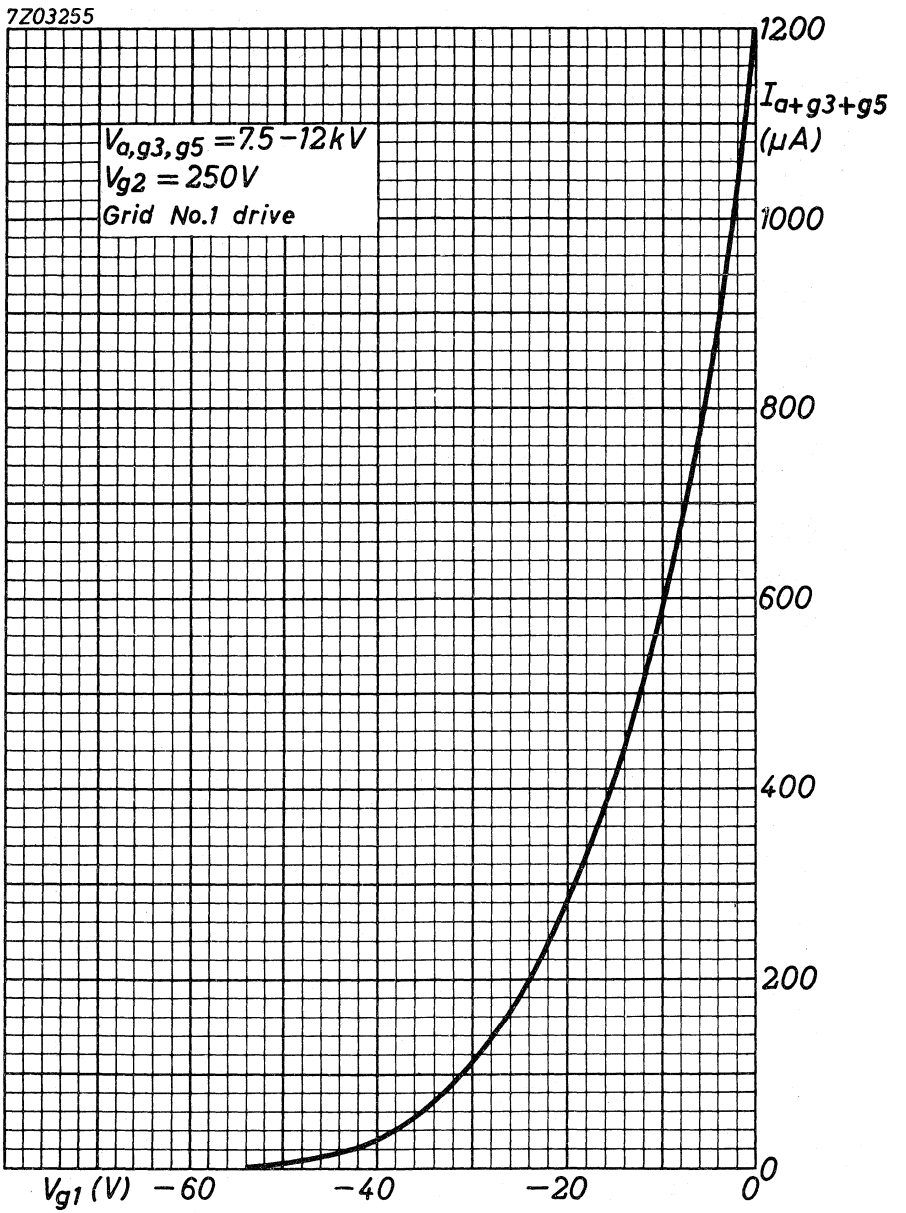

Final accelerator current as a function of grid No.1 voltage

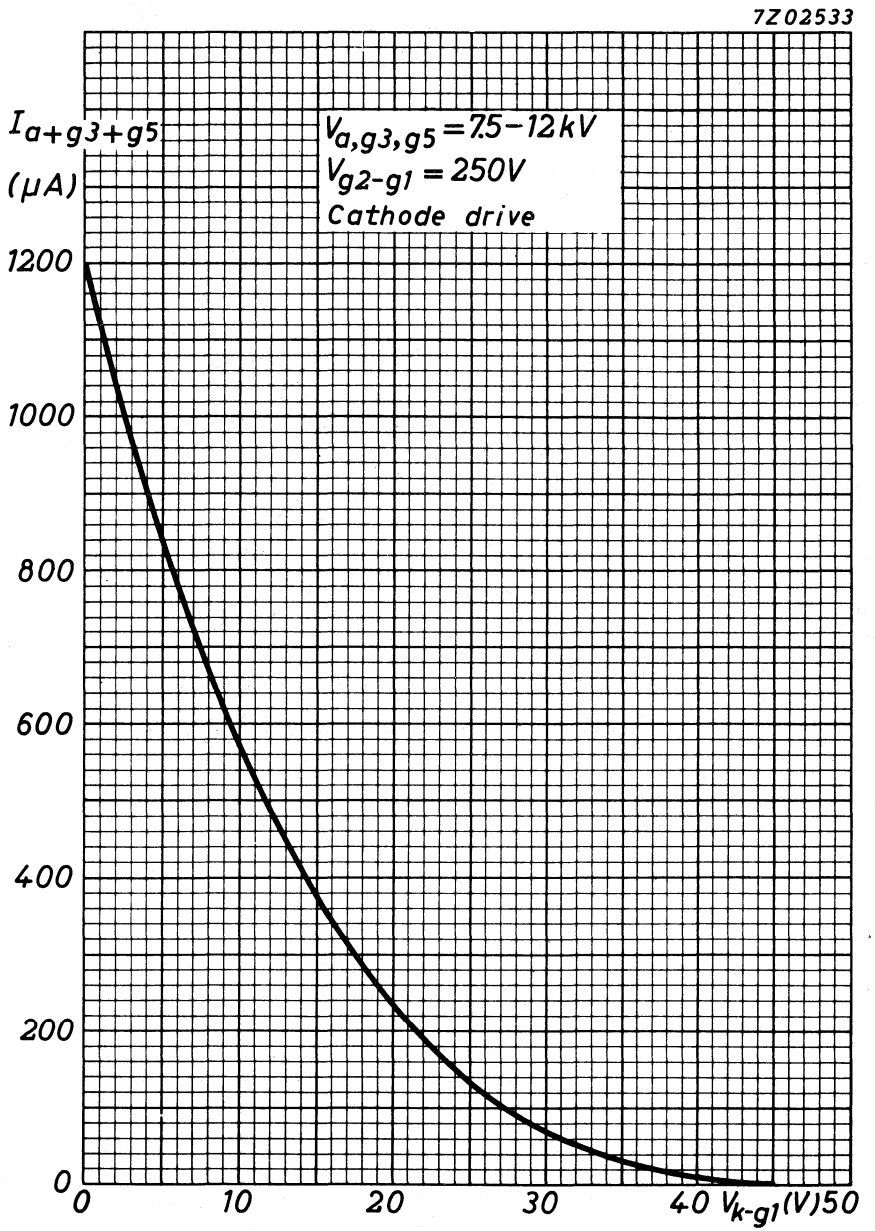

Final accelerator current as a function of cathode voltage

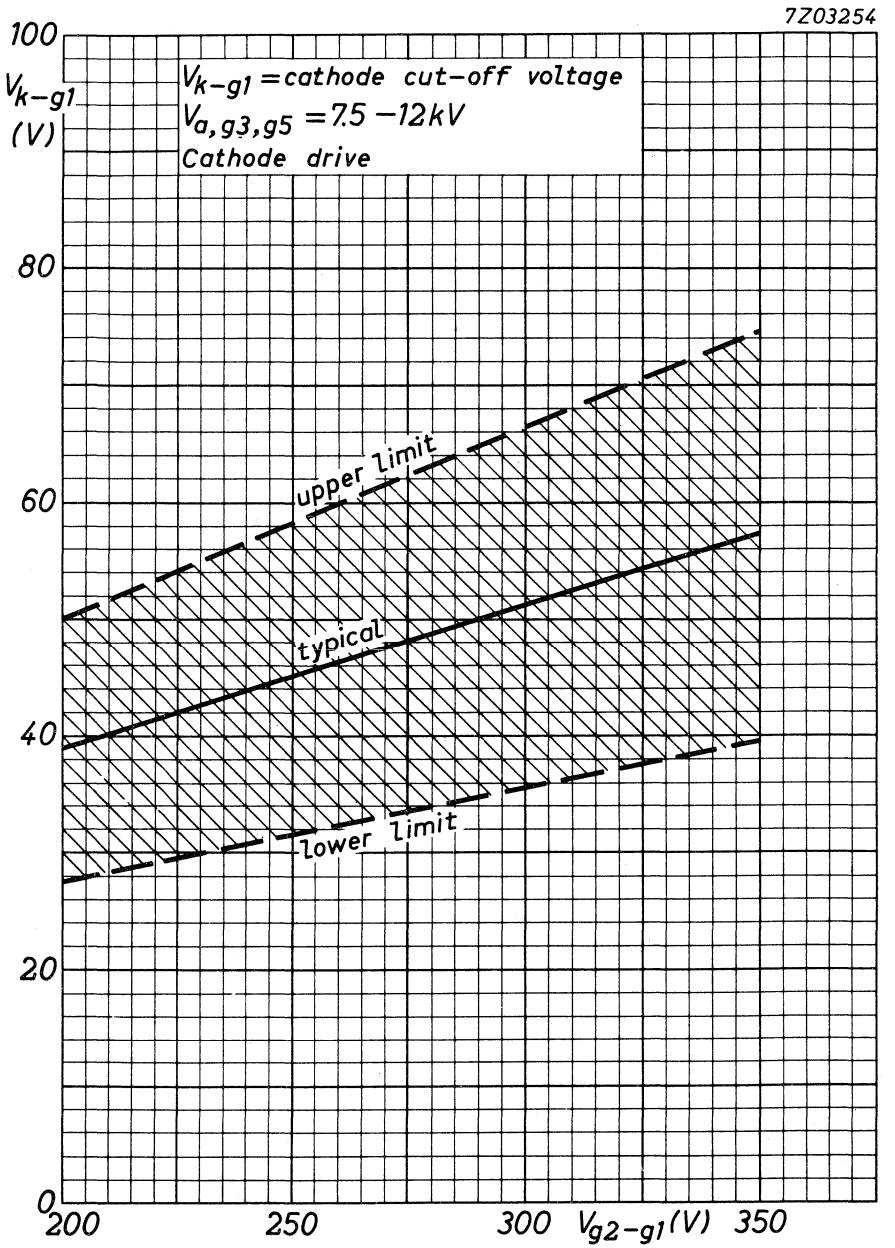

Limits of cathode cut-off voltage as a function of grid No. 2 voltage

T.V. PICTURE TUBE

31 cm (12 in), 110°, rectangular direct vision picture tube with integral protection for black-and-white T.V. The rimband leaves the edge of the faceplate free. The 20 mm neck diameter results in a low deflection energy.

QUICK REFERENCE DATA			
Face diagonal		31	cm (12 in)
Deflection angle		110°	
Overall length	max.	233	mm
Neck diameter		20	mm
Light transmission of face glass		50	%
Focusing		electrostatic	
Bulb		reinforced	
Heating		11 V, 75	mA

SCREEN

Metal backed phosphor			
Luminescence		white	
Light transmission of face glass		50	%
Useful diagonal	min.	295	mm
Useful width	min.	257	mm
Useful height	min.	195	mm

HEATING

Indirect by A.C. or D.C.; parallel supply

Heater voltage	V_f	11	V
Heater current	I_f	75	mA ←

The maximum total deviation from the nominal heater voltage is 15%.
The deviation may consists of:
max. 7% continous deviation, e.g. due to component spread,
max.10% temporary variation.
In case of supply direct from a battery, the heater voltage must be within the limits given on page 8.

MECHANICAL DATA

Dimensions in mm

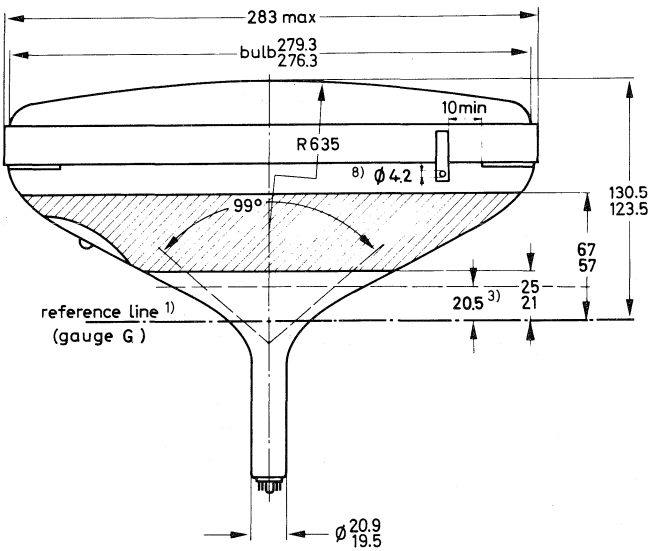

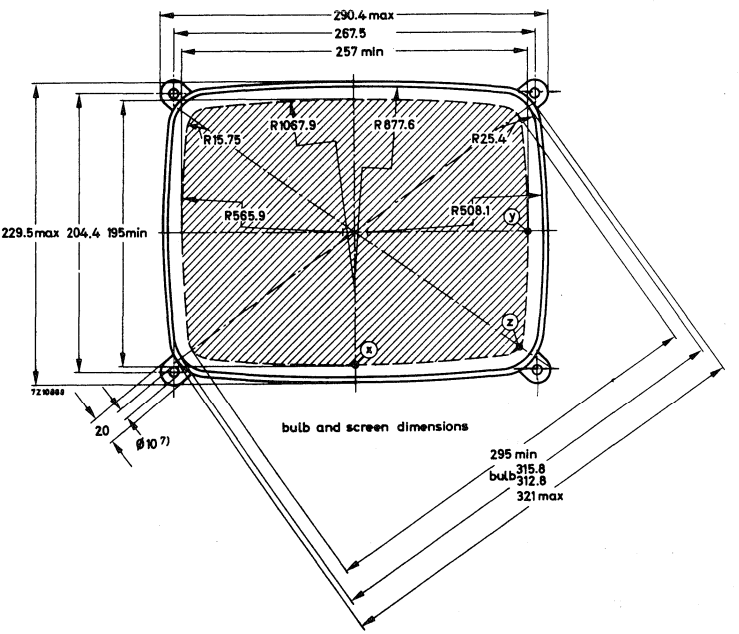

Notes see page 4

MECHANICAL DATA (continued)

Dimensions in mm

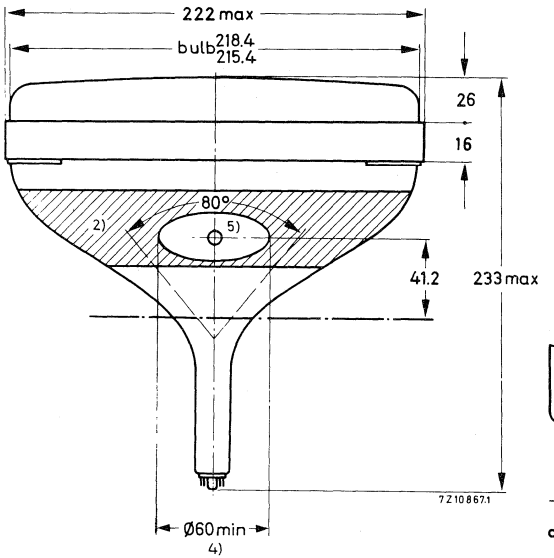

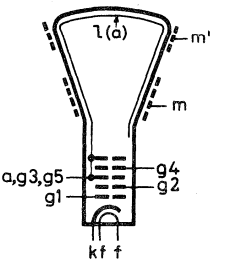

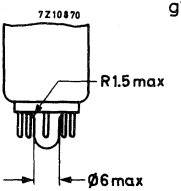

detail of base

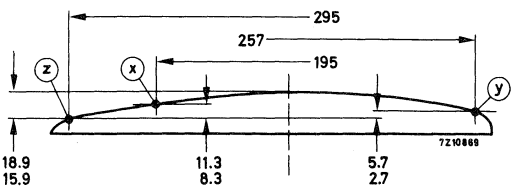

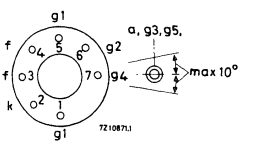

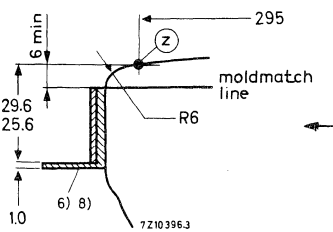

Mounting position: any

Net weight : approx. 2.8 kg

Base : 7 pins miniature, with pumping stem

The socket for the base should not be rigidly mounted, it should have flexible leads and be allowed to move freely.

Notes see page 4

NOTES TO OUTLINE DRAWING

1. The reference line is determined by the plane of the upper edge of the flange of the reference line gauge when the gauge is resting on the cone. (Gauge G)
2. The configuration of the external conductive coating may be different but contains the contact area shown in the drawing.
   The external conductive coating must be earthed.
3. End of guaranteed contour. The maximum neck and cone contour is given by the reference line gauge G.
4. This area must be kept clean.
5. Recessed cavity contact I.E.C. 67-III-2.
6. The displacement of any lug with respect to the plane through the three other lugs is max. 2 mm.
7. The mounting screws in the cabinet must be situated inside a circle of 7 mm diameter drawn around the true geometrical positions, i.e. at the corners of a rectangle of 267.5 mm x 204.4 mm.
8. The metal band must be earthed by means of the tag provided.
   No electrical contact between the metal band and the mounting lug can be guaranteed.

MAXIMUM CONE CONTOUR DRAWING

Dimensions in mm

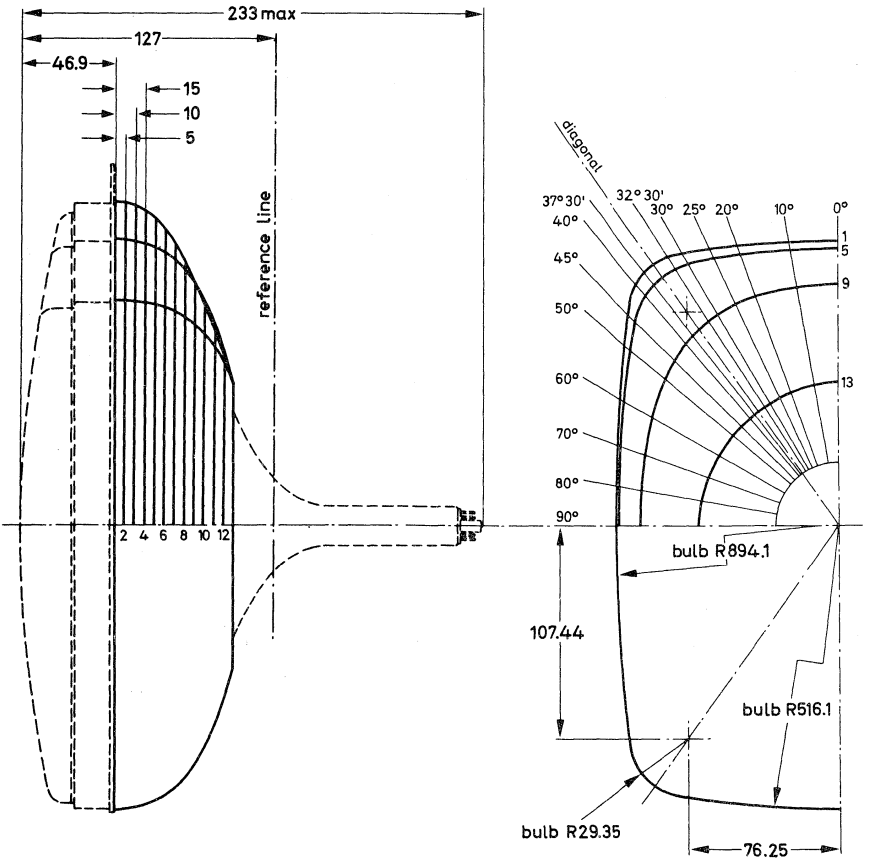

Section	Distance from section 1	Distance from centre (Max. values)															
		0° long	10°	20°	25°	30°	32° 30'	Diagon.	37° 30'	40°	45°	50°	60°	70°	80°	90° short
13	59.6 nom.	72.19	72.03	71.66	71.44	71.24	71.14	71.03	70.96	70.88	70.76	70.66	70.6	70.67	70.8	70.87
12	55 "	85.86	85.57	84.86	84.43	83.98	83.75	83.5	83.32	83.11	82.72	82.38	81.88	81.6	81.5	81.5
11	50 "	99.45	99.36	98.89	98.46	97.88	97.53	97.1	96.75	96.32	95.38	94.4	92.42	90.7	89.52	89.08
10	45 "	112.3	112.41	112.2	111.73	110.94	110.41	109.7	109.1	108.33	106.6	104.72	100.9	97.65	95.48	94.7
9	40 "	121.29	121.87	122.76	122.85	122.41	121.94	121.18	120.47	119.48	117.07	114.3	108.57	103.8	100.73	99.66
8	35 "	127.9	128.92	131.17	132.12	132.46	132.27	131.65	130.9	129.74	126.54	122.7	114.93	108.76	104.96	103.67
7	30 "	132.64	133.98	137.39	139.31	140.81	141.16	140.85	140.16	138.87	134.6	129.45	119.71	112.47	108.18	106.76
6	25 "	135.97	137.47	141.65	144.41	147.22	148.29	148.45	147.88	146.49	140.89	134.31	122.94	115.02	110.48	109
5	20 "	138.44	139.99	144.54	147.82	151.55	153.17	153.7	153.2	**151.66**	144.83	137.09	124.69	116.45	111.81	110.31
4	15 "	140.31	141.88	146.63	150.22	154.59	156.61	157.35	156.85	155.08	147.13	138.48	125.41	117.01	112.34	110.84
3	10 "	141.62	143.2	148.04	151.78	156.46	158.67	159.52	159	157.1	148.53	139.42	126.02	117.55	112.87	111.36
2	5 "	142.36	143.94	148.82	152.63	157.44	159.75	160.66	160.15	158.21	149.41	140.12	126.58	118.07	113.37	111.86
1	0 "	142.8	144.38	149.27	153.07	157.88	160.19	161.1	160.59	158.67	149.9	140.62	127.06	**118.53**	113.81	112.3

CAPACITANCES

Final accelerator to external conductive coating	$C_{a,g_3,g_5/m}$	<	900	pF
		>	450	pF
Final accelerator to metal band	$C_{a,g_3,g_5/m'}$		300	pF
Cathode to all	C_k		3	pF
Grid No.1 to all	C_{g_1}		7	pF

FOCUSING electrostatic

DEFLECTION magnetic

Diagonal deflection angle	110°
Horizontal deflection angle	99°
Vertical deflection angle	80°

PICTURE CENTRING MAGNET

Field intensity perpendicular to the tube axis adjustable from 0 to 800 A/m (0 to 10 Oerstedt).
Maximum distance between centre of field of this magnet and reference line: 55 mm.

TYPICAL OPERATING CONDITIONS

Grid drive service

Final accelerator voltage	V_{a,g_3,g_5}	11	kV
Focusing electrode voltage	V_{g_4}	0 to 350	V [1]
Grid No.2 voltage	V_{g_2}	250	V
Grid No.1 voltage for visual extinction of focused raster	V_{g_1}	-35 to -69	V

Cathode drive service

Voltages are specified with respect to grid No.1

Final accelerator voltage	V_{a,g_3,g_5}	11	kV
Focusing electrode voltage	V_{g_4}	0 to 350	V [1]
Grid No.2 voltage	V_{g_2}	250	V
Cathode voltage for visual extinction of focused raster	V_k	32 to 58	V

[1] Individual tubes will have optimum focus within this range. In general an acceptable picture will be obtained with a fixed focus voltage.

LIMITING VALUES (Design centre rating system, unless otherwise stated)

Final accelerator voltage	V_{a,g_3,g_5}	max.	12	kV
		min.	8.5	kV [1]
Grid No.4 voltage				
positive	V_{g_4}	max.	500	V
negative	$-V_{g_4}$	max.	50	V
Grid No.2 voltage	V_{g_2}	max.	350	V
		min.	200	V
Grid No.2 to grid No.1 voltage	V_{g_2/g_1}	max.	450	V
Cathode to grid No.1 voltage				
positive	V_{k/g_1}	max.	100	V
positive peak	$V_{k/g_{1p}}$	max.	350	V [2]
negative	$-V_{k/g_1}$	max.	0	V
negative peak	$-V_{k/g_{1p}}$	max.	2	V
Cathode to heater voltage				
positive	$V_{k/f}$	max.	110	V
positive peak	V_{k/f_p}	max.	130	V

CIRCUIT DESIGN VALUES

Grid No.4 current				
positive	I_{g_4}	max.	25	μA
negative	$-I_{g_4}$	max.	25	μA
Grid No.2 current				
positive	I_{g_2}	max.	5	μA
negative	$-I_{g_2}$	max.	5	μA

MAXIMUM CIRCUIT VALUES

Resistance between cathode and heater	$R_{k/f}$	max.	1	MΩ
Impedance between cathode and heater	$Z_{k/f}$ (50 Hz)	max.	0.1	MΩ
Grid No.1 circuit resistance	R_{g_1}	max.	1.5	MΩ
Grid No.1 circuit impedance	Z_{g_1} (50 Hz)	max.	0.5	MΩ
Resistance between external conductive coating and rimband	$R_{m/m'}$	min.	2	MΩ

1) Absolute maximum rating system.
2) Maximum pulse duration 22% of a cycle but max. 1.5 ms.

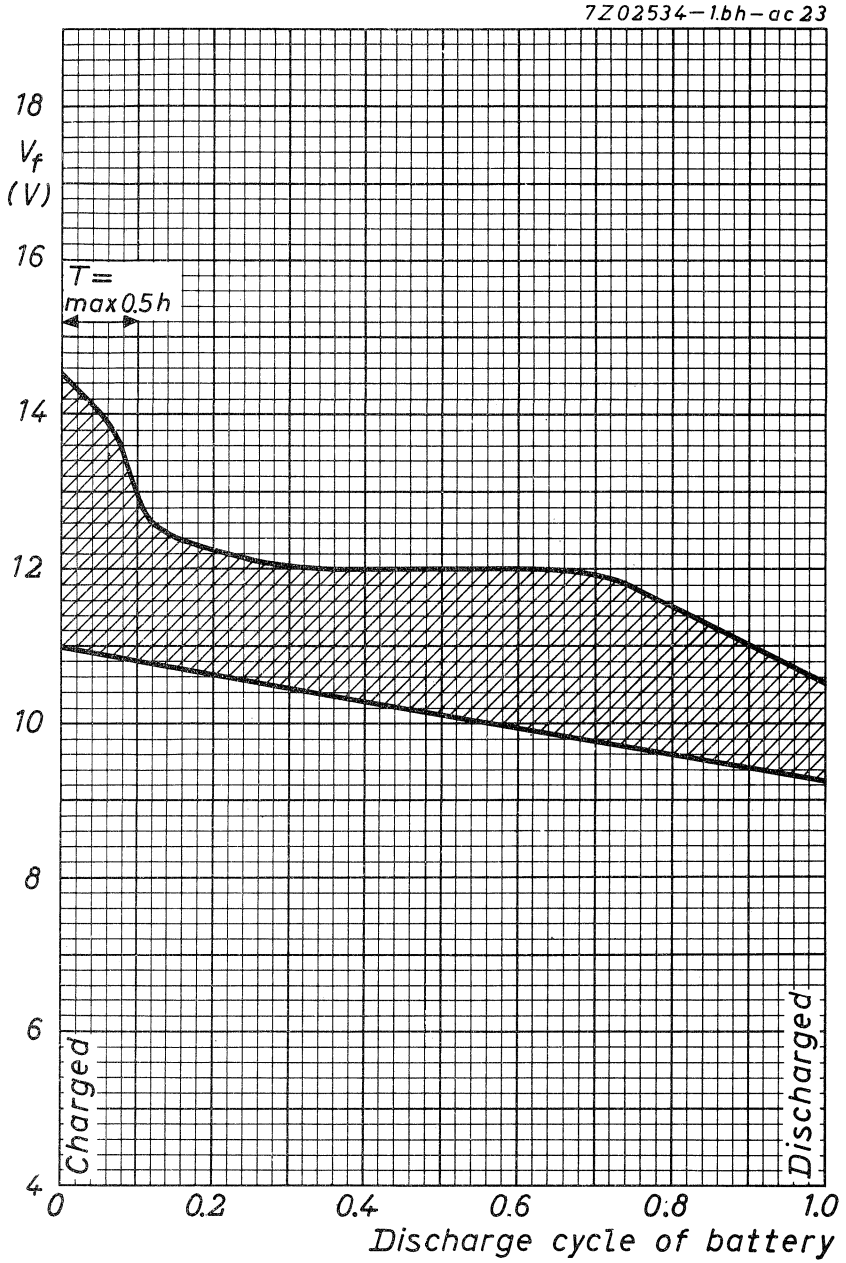
7Z02534-1.bh-ac23
18
V_f
(V)
16
T=
max 0.5 h
14
12
10
8
6
4
Charged
Discharged
0
0.2
0.4
0.6
0.8
1.0
Discharge cycle of battery

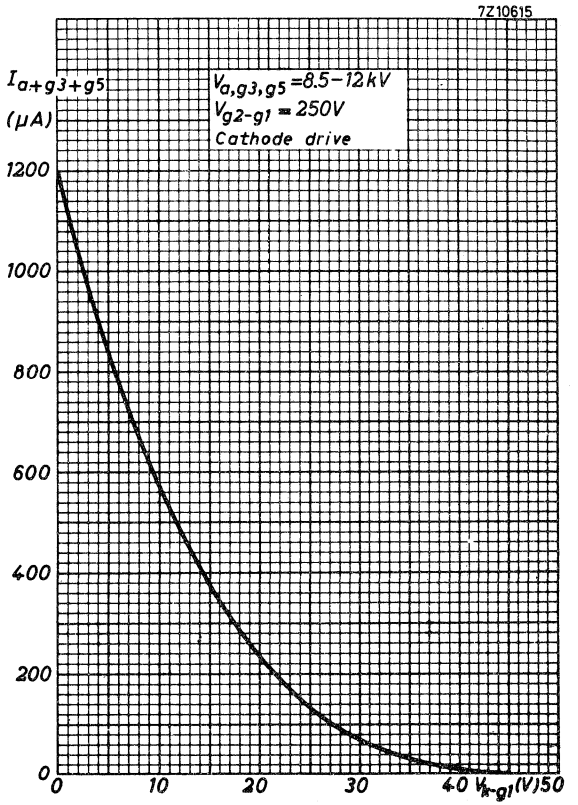

Final accelerator current as a function of cathode voltage

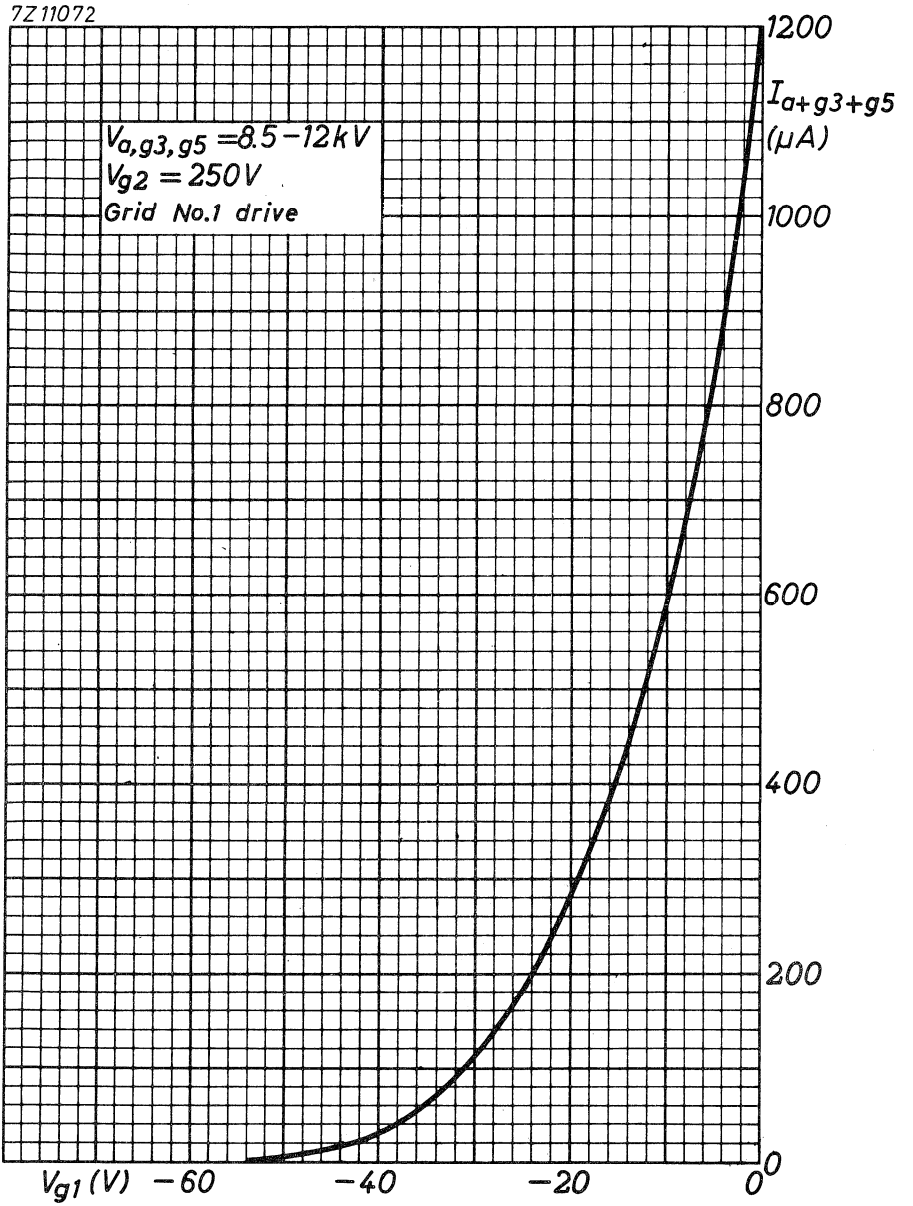

Final accelerator current as a function of grid No. 1 voltage

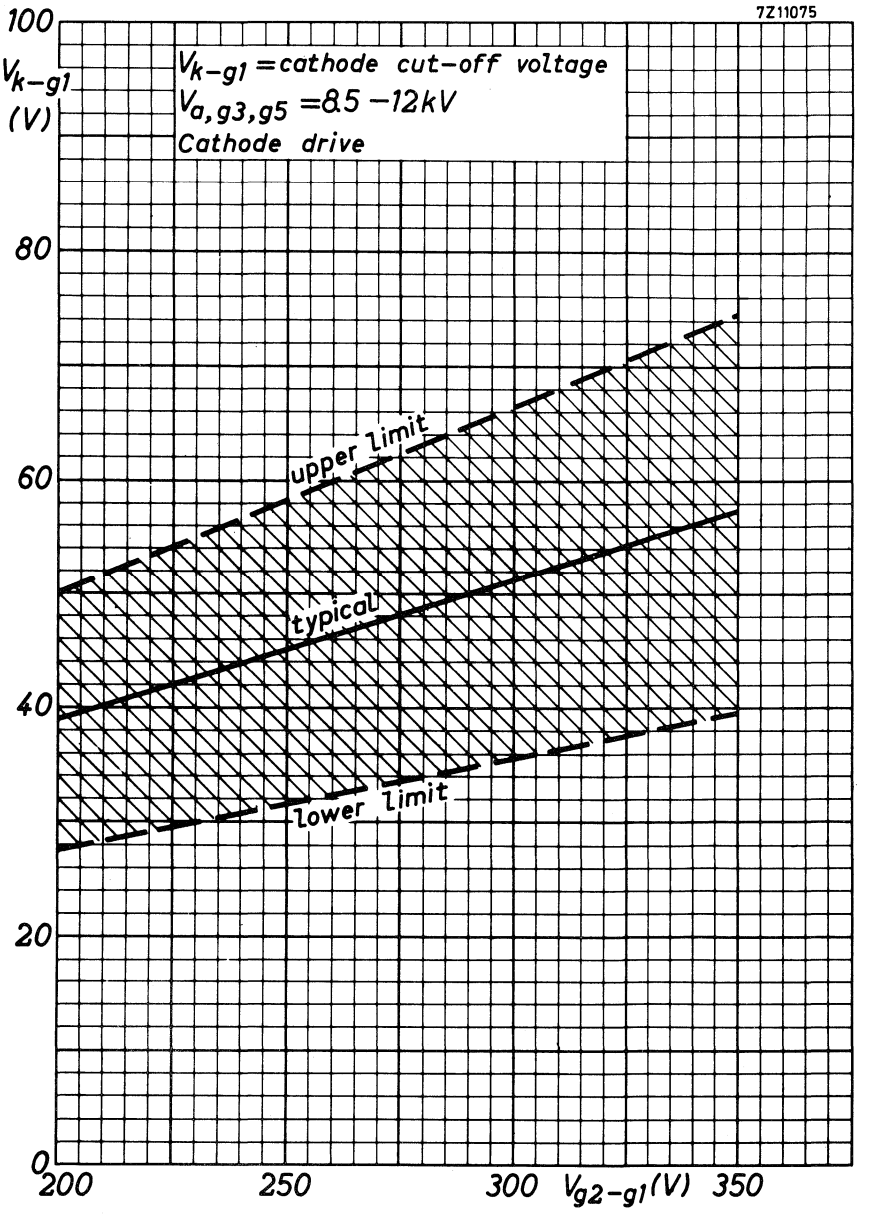

Limits of cathode cut-off voltage as a function of grid No. 2 voltage

T.V. PICTURE TUBE

44 cm (17 in), 110°, rectangular direct vision picture tube with integral protection for black-and-white T.V. The rimband leaves the edge of the faceplate free.

QUICK REFERENCE DATA	
Face diagonal	44 cm (17 in)
Deflection angle	110°
Overall length	284.5 mm
Neck diameter	28.6 mm
Light transmission of face glass	48 %
Focusing	electrostatic
Bulb	reinforced
Heating	6.3 V, 300 mA

SCREEN

Metal backed phosphor			
Luminescence	white		
Light transmission of face glass		48	%
Useful diagonal	min.	413	mm
Useful width	min.	346	mm
Useful height	min.	270	mm

HEATING

Indirect by A.C. or D.C.; series or parallel supply

Heater current	I_f	300	mA
Heater voltage	V_f	6.3	V

If the tube is connected in a series heater chain the surge heater voltage must not exceed 9.5 V_{rms} when the supply is switched on.

MECHANICAL DATA

Dimensions in mm

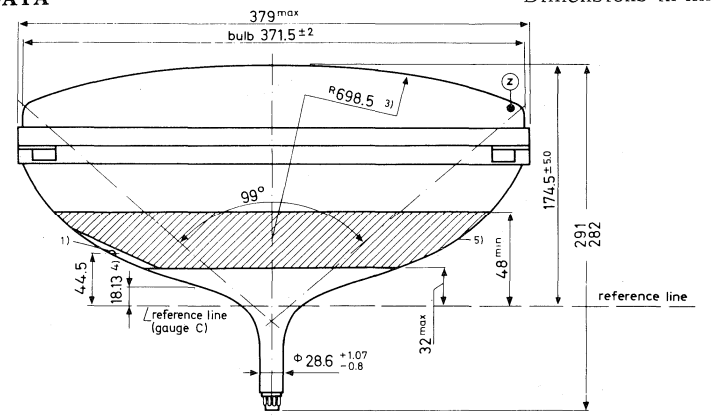

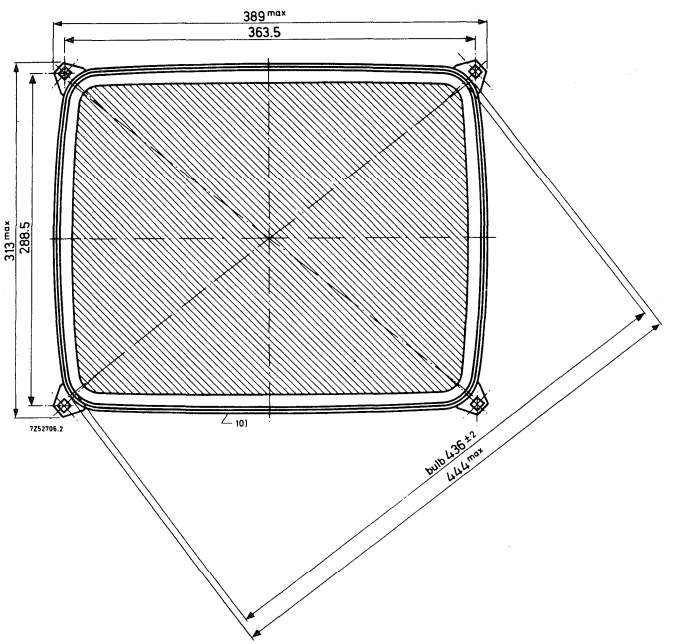

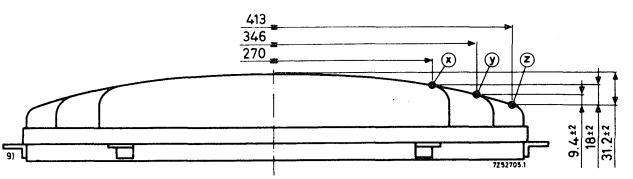

MECHANICAL DATA (continued)

Dimensions in mm

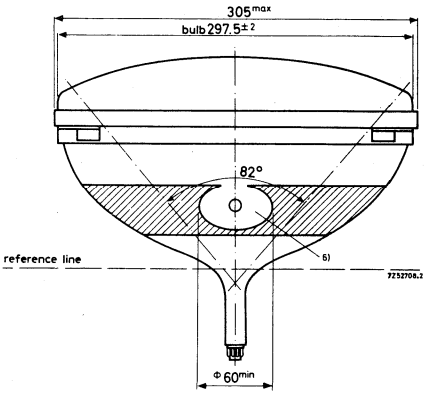

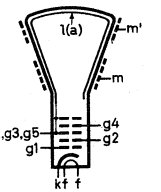

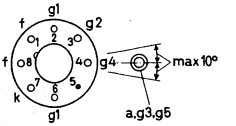

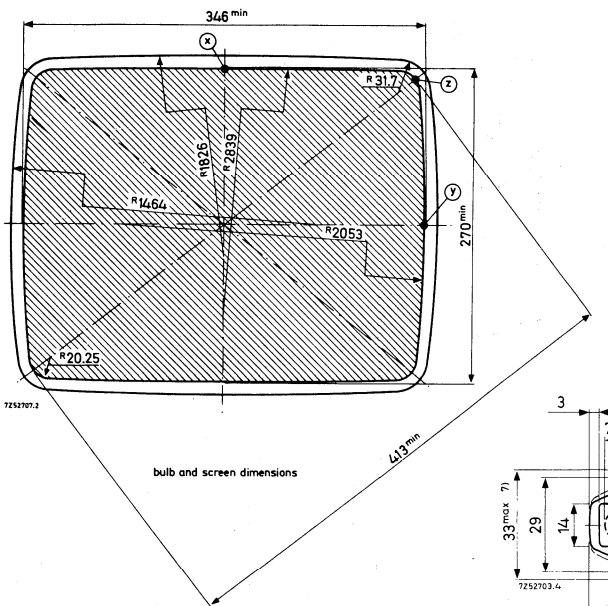

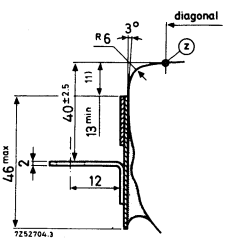

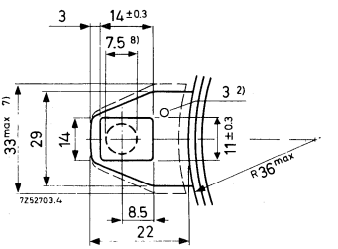

For notes see page 5

Mounting position: any

Base : neo eightar 7 pin JEDEC B7-208, B8H, I.E.C. 67-I-31a

Net weight : approx. 5.5 kg

The bottom circumference of the base wafer will fall within a circle concentric with the tube axis and having a diameter of 40 mm.
The socket for the base should not be rigidly mounted: it should have flexible leads and be allowed to move freely.

MAXIMUM CONE CONTOUR DRAWING

Dimensions in mm

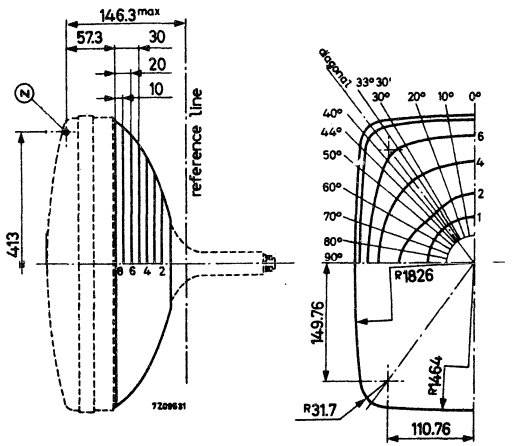

Section	Nom. distance from point "Z"	Distance from centre (max. values)												
		0° Long	10°	20°	30°	33° 30'	36° 30' Diagonal	40°	44°	50°	60°	70°	80°	90° Short
1	128	60	60	60	60	60	60	60	60	60	60	60	60	60
2	117.3	95.9	95.2	93	92.3	92.1	92.1	92.3	92.6	93.1	93.8	94.6	94.9	95.1
3	107.3	118.1	117.8	118.3	118.3	118.6	119.2	117.8	117.7	117.2	115.5	113.3	111.2	109.8
4	97.3	135	136.1	138.3	139.9	141	141.6	141.1	138.5	135.4	130.5	125.6	121.8	120.8
5	87.3	149.5	151.1	155.1	159.1	161.3	162	161.5	157.5	151	142	135.8	130.8	129.5
6	77.3	162.5	164	168.8	176	179	179.5	178	173.5	163.4	150.8	143.3	138.3	136.4
7	67.3	172.5	174.4	180.1	190	194.1	196.3	194.9	186.8	174.5	159.1	149.3	143.9	141.7
8	57.3	179.7	183.1	189.3	201.1	207.4	210.9	206.1	196	182.8	165.5	154	147.9	145.6

NOTES TO OUTLINE DRAWING

1. Small cavity contact I.E.C.-67-III-2.
2. The metal rimband must be earthed. The hole of 3 mm dia in each lug is provided for this purpose.
3. Spherical faceplate.
4. End of guaranteed contour. The maximum contour from reference line towards screen is given by the reference line gauge C (18.13 mm).
5. The configuration of the external conductive coating may be different but contains the contact area as shown in the drawing.
   The external conductive coating must be earthed.
6. This area must be kept clean.
7. Minimum space to be reserved for mounting lug.
8. The mounting screws in the cabinet must be situated inside a circle of 7.5 mm diameter drawn around the true geometrical positions i.e. at the corners of a rectangle of 363.5 mm x 288.5 mm.
9. The displacement of any lug with respect to the plane through the other three lugs is max. 2 mm.
10. Max. curvatures of the outside tension band are nominal bulb radius +4 mm.
11. Distance from reference point Z to any hardware.

CAPACITANCES

Final accelerator to external conductive coating	$C_{a,g_3,g_5/m}$	<	1300	pF
		>	700	pF
Final accelerator to metal band	$C_{a,g_3,g_5/m'}$		200	pF
Cathode to all	C_k		5	pF
Grid No.1 to all	C_{g_1}		7	pF

FOCUSING electrostatic

DEFLECTION magnetic

Diagonal deflection angle	110°
Horizontal deflection angle	100°
Vertical deflection angle	83°

PICTURE CENTRING MAGNET

Field intensity perpendicular to the tube axis adjustable from 0 to 800 A/m (0 to 10 Oerstedt).
Maximum distance between centre of field of this magnet and reference line: 57 mm.

TYPICAL OPERATING CONDITIONS

Grid drive service

Final accelerator voltage	V_{a,g_3,g_5}	18	kV
Focusing electrode voltage	V_{g_4}	0 to 400	V 1)
Grid No.2 voltage	V_{g_2}	400	V
Grid No.1 voltage for visual extinction of focused raster	V_{g_1}	-40 to -77	V

Cathode drive service

Voltages are specified with respect to grid No.1

Final accelerator voltage	V_{a,g_3,g_5}	18	kV
Focusing electrode voltage	V_{g_4}	0 to 400	V 1)
Grid No.2 voltage	V_{g_2}	400	V
Cathode voltage for visual extinction of focused raster	V_k	36 to 66	V

1) Individual tubes will have optimum focus within this range. In general an acceptable picture will be obtained with a fixed focus voltage.

LIMITING VALUES (Design centre rating system, unless otherwise stated)

Final accelerator voltage at $I_a, g_3, g_5 = 0$	V_{a, g_3, g_5}	max. min.	18 12	kV kV 1)
Grid No.4 voltage,				
positive	V_{g_4}	max.	1000	V
negative	$-V_{g_4}$	max.	500	V
Grid No.2 voltage	V_{g_2}	max. min.	700 350	V 3) V
Grid No.2 to grid No.1 voltage	V_{g_2/g_1}	max.	850	V
Grid No.1 voltage,				
positive	V_{g_1}	max.	0	V
positive peak	$V_{g_{1p}}$	max.	2	V
negative	$-V_{g_1}$	max.	150	V
negative peak	$-V_{g_{1p}}$	max.	400	V 2)
Cathode to heater voltage,				
positive	$V_{k/f}$	max.	250	V
positive peak	V_{k/f_p}	max.	300	V
negative	$-V_{k/f}$	max.	135	V
negative peak	$-V_{k/f_p}$	max.	180	V
positive during equipment warm-up period not exceeding 15 s	$V_{k/f}$	max.	410	V 4)

1) Absolute maximum rating system.

2) Maximum pulse duration 22% of a cycle but maximum 1.5 ms.

3) At $V_{g_1/k} = 0$ V.

4) Between 15 s and 45 s after switching on a decrease in k/f voltage, linear proportional with time, from 410 V to 250 V is permissible.

CIRCUIT DESIGN VALUES

Grid No.4 current,				
positive	I_{g_4}	max.	25	μA
negative	$-I_{g_4}$	max.	25	μA
Grid No.2 current,				
positive	I_{g_2}	max.	5	μA
negative	$-I_{g_2}$	max.	5	μA

MAXIMUM CIRCUIT VALUES

Resistance between cathode and heater	$R_{k/f}$	max.	1.0	MΩ
Impedance between cathode and heater	$Z_{k/f}$ (50 Hz)	max.	0.1	MΩ
Grid No.1 circuit resistance	R_{g_1}	max.	1.5	MΩ
Grid No.1 circuit impedance	Z_{g_1} (50 Hz)	max.	0.5	MΩ
Resistance between external conductive coating and rimband	$R_{m/m'}$	min.	2	MΩ

In order to avoid excessive hum, the A.C. component of the heater to chassis voltage should be as low as possible and must not exceed 20 V_{rms}.

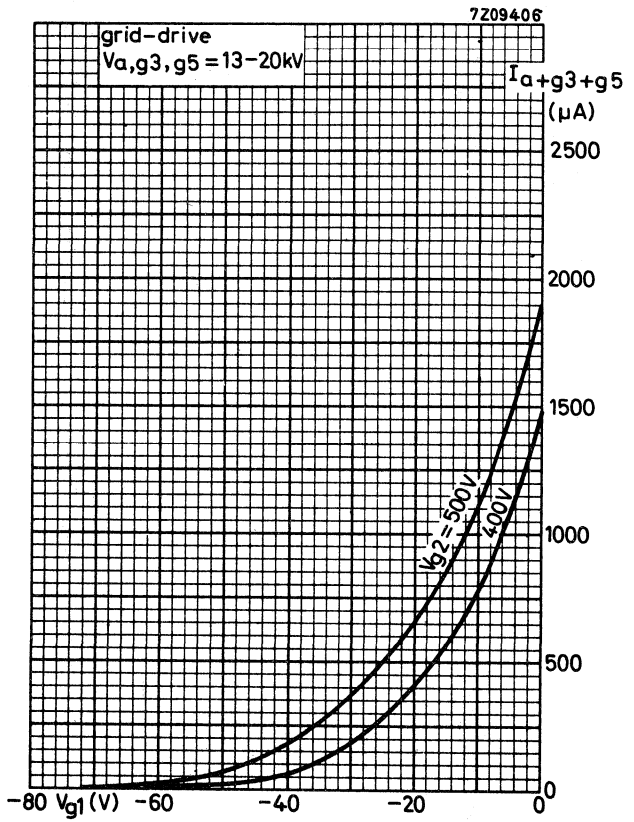

Final accelerator current as a function of grid No.1 voltage

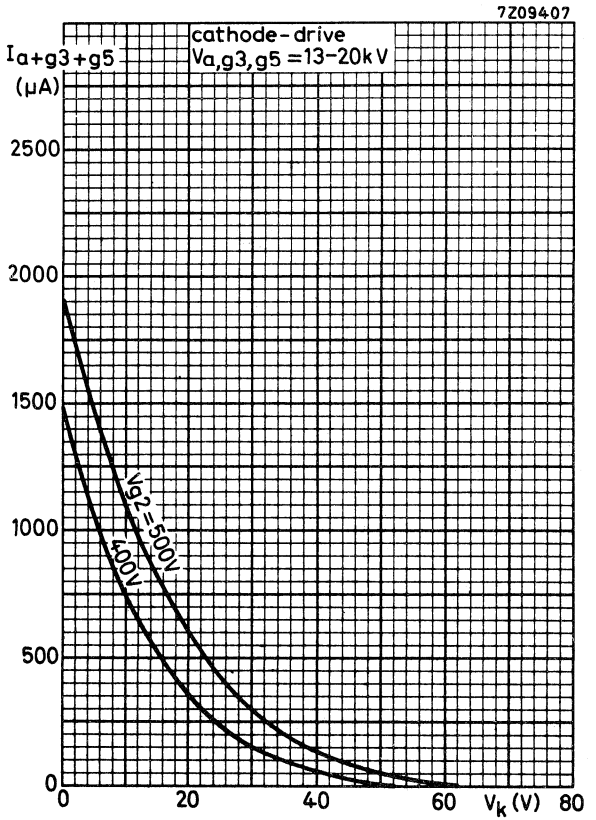

Final accelerator current as a function of cathode voltage

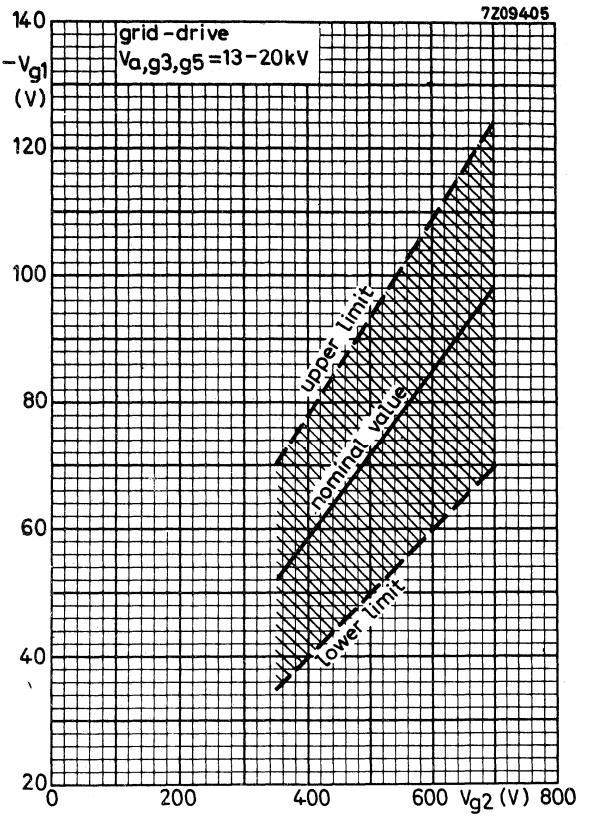

Limits of grid No.1 cut-off voltage as a function of grid No.2 voltage

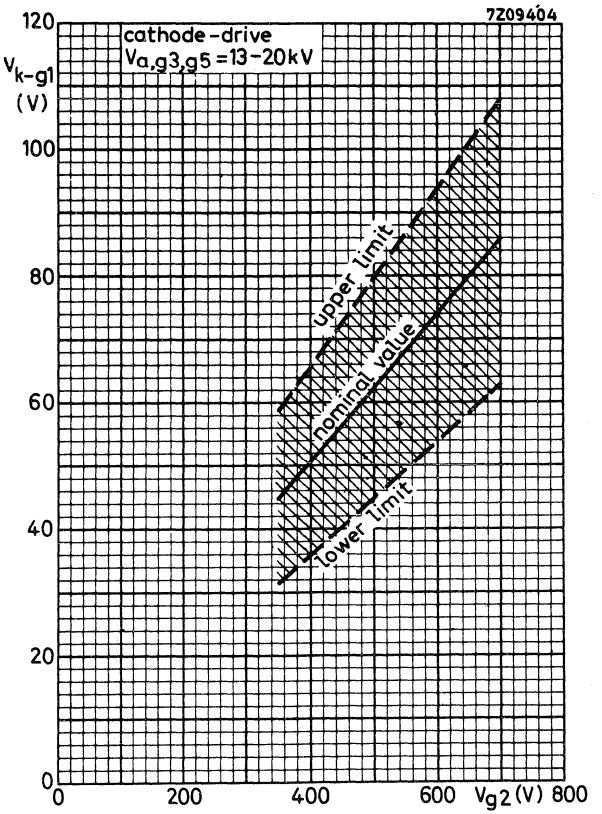

Limits of cathode cut-off voltage as a function of grid No.2 voltage

T.V. PICTURE TUBE

Replacement type A47-26W

T.V. PICTURE TUBE

47 cm (19 inch), 110°, rectangular direct vision picture tube for black- and white T.V.

QUICK REFERENCE DATA		
Face diagonal	47	cm (19 inch)
Deflection angle	110°	
Overall length	302.5	mm
Neck diameter	28.6	mm
Light transmission of face glass A47-14W	48	%
Focusing		electrostatic
Bulb		mono-panel
Heating	6.3 V, 300	mA

SCREEN

Metal backed phosphor

Luminescence	white		
Light transmission of face glass		48	%
Useful diagonal	min.	446	mm
Useful width	min.	384	mm
Useful height	min.	305	mm

HEATING

Indirect by A.C. or D.C.; series or parallel supply

Heater current	I_f	300	mA
Heater voltage	V_f	6.3	V

If the tube is connected in a series heater chain the surge heater voltage must not exceed 9.5 V_{rms} when the supply is switched on.

MECHANICAL DATA

Dimensions in mm

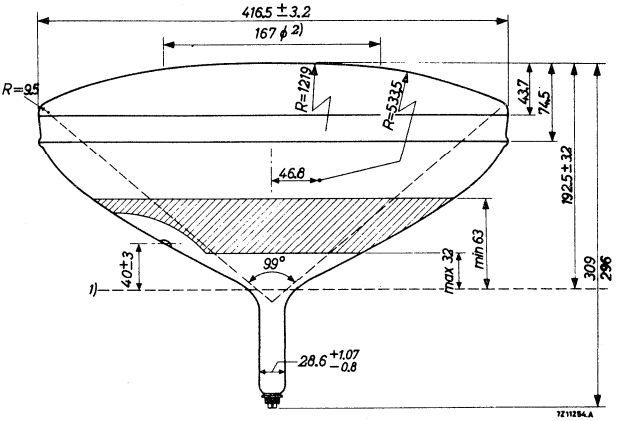

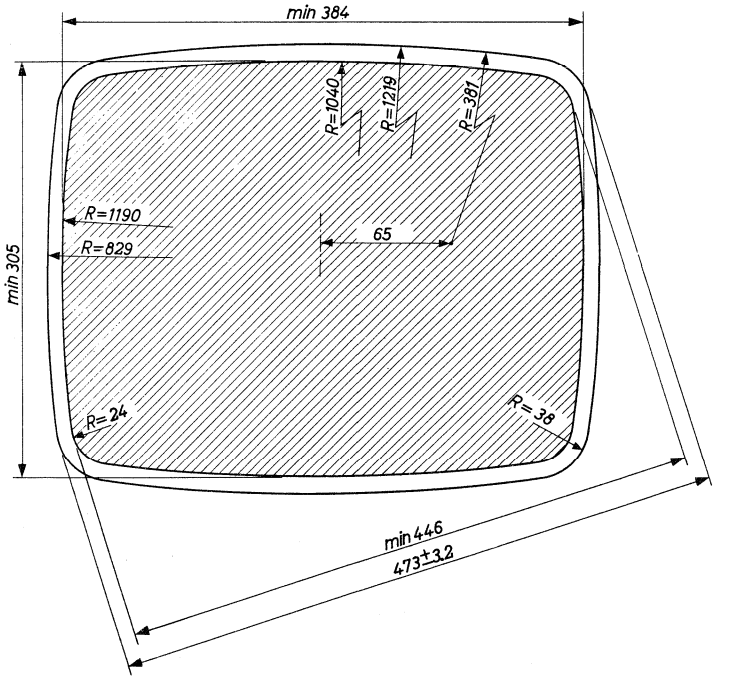

MECHANICAL DATA (continued) Dimensions in mm

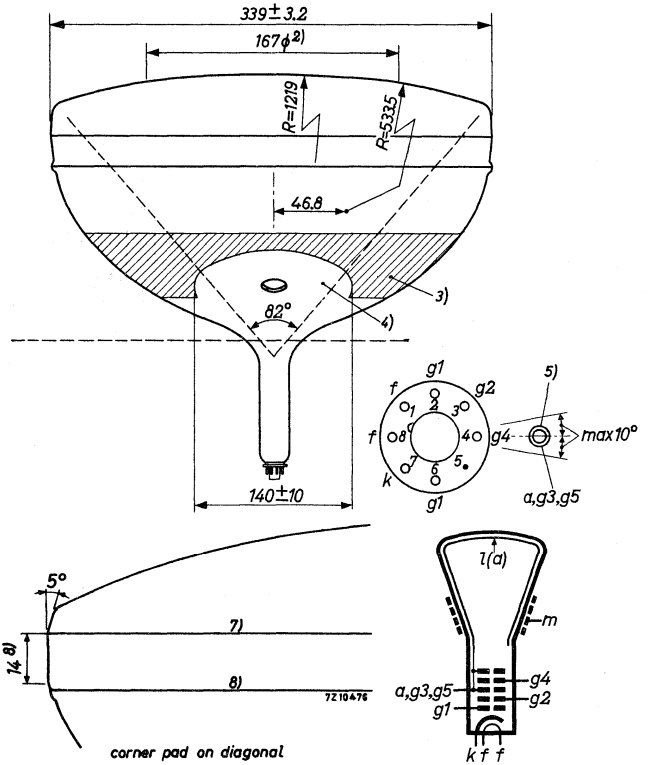

Mounting position: any

Base : JEDEC B7 208. Neo-eightar 7 p., B8H

Net weight : approx. 7 kg

The bottom circumference of the base wafer will fall within a circle concentric with the tube axis and having a diameter of 40 mm.
The socket for the base should not be rigidly mounted; it should have flexible leads and be allowed to move freely.

For notes see page 5.

MAXIMUM CONE CONTOUR DRAWING

Dimensions in mm

All values are given as nominal unless otherwise indicated.

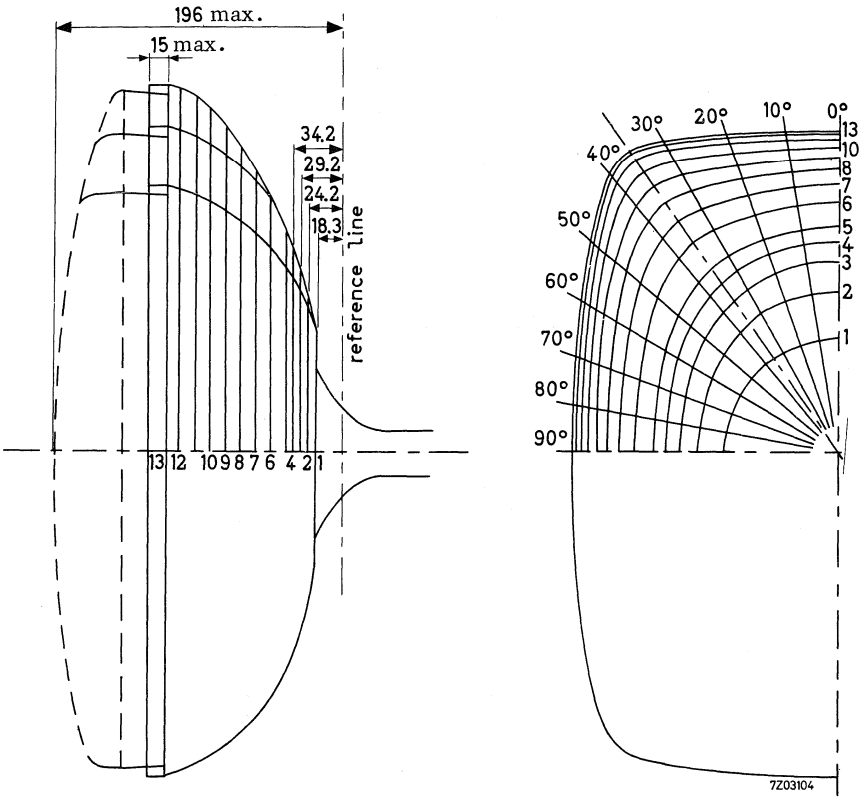

Section	Distance from Ref. line	Distance from centre (max. values)										
		Long 0°	10°	20°	30°	Diag.	40°	50°	60°	70°	80°	Short 90°
1	18.3	75.0	75.0	75.0	75.0	75.0	75.0	75.0	75.0	75.0	75.0	75.0
2	24.2	106.1	105.6	105.6	103.8	102.7	101.6	99.1	96.2	93.7	92.4	92.4
3	29.2	125.3	125.7	124.6	122.3	120.6	118.9	115.1	111.0	106.7	104.2	103.9
4	34.2	138.2	138.9	137.8	136.0	134.3	132.3	127.5	121.8	117.0	113.7	113.0
5	39.2	148.6	149.0	148.5	147.7	146.3	144.2	138.0	131.3	125.2	121.6	120.6
6	49.2	164.5	164.6	165.2	167.3	166.8	164.6	156.0	146.8	139.0	134.5	133.1
7	59.2	176.5	176.6	178.7	183.4	184.0	181.4	170.2	158.9	149.8	144.6	142.9
8	69.2	186.3	186.5	190.3	197.0	198.9	195.8	182.3	169.0	158.9	152.8	151.1
9	79.2	194.2	195.0	200.2	209.1	212.0	208.6	192.5	177.5	166.2	159.8	157.9
10	89.2	200.7	202.1	208.4	219.6	223.5	219.7	200.4	184.2	172.3	165.8	163.4
11	99.2	206.0	208.0	215.0	227.9	232.8	228.6	206.6	189.2	176.9	170.0	167.9
12	109.2	210.0	212.3	219.6	233.0	238.1	233.9	210.9	193.2	180.5	173.6	171.3
13	118.0	212.2	214.6	221.8	234.9	240.5	236.0	213.1	195.1	182.6	175.7	173.5

CAPACITANCES

Final accelerator to external conductive coating	$C_{a,g_3,g_5/m}$	< 1500 pF > 1000 pF
Cathode to all	C_k	4 pF
Grid No.1 to all	C_{g_1}	6 pF

FOCUSING electrostatic

DEFLECTION magnetic

Diagonal deflection angle	110°
Horizontal deflection angle	99°
Vertical deflection angle	82°

PICTURE CENTRING MAGNET

Field intensity perpendicular to the tube axis adjustable from 0 to 800 A/m (0 to 10 Oerstedt).
Maximum distance between centre of field of this magnet and reference line: 57 mm.

NOTES TO OUTLINE DRAWING

1. Reference line, determined by the plane of the upper edge of the flange of the reference line gauge when the gauge is resting on the cone. Reference line gauge C.
2. Outer radius of 1219 mm applies to this area.
3. The external conductive coating must be earthed. The configuration of the outer coating is optional, but contains the contact area as shown.
4. This area must be kept clean.
5. Small cavity contact.
6. At any point around the splice line seal the bulge at this seal will not protrude more than 1.6 mm beyond the tube circumference at the mould-match line.
7. Mould-match line (= reference line for measuring the maximum dimensions).
8. Minimum undisturbed area between mould-match line and splice line. No excessive pressure should be exerted by the support band on the splice line seal.

TYPICAL OPERATING CONDITIONS

Grid drive service

Final accelerator voltage	V_{a,g_3,g_5}	18	kV
Focusing electrode voltage	V_{g_4}	0 to 400	V [1]
Grid No.2 voltage	V_{g_2}	400	V
Grid No.1 voltage for visual extinction of focused raster	V_{g_1}	-40 to -77	V

Cathode drive service

Voltages are specified with respect to grid No.1

Final accelerator voltage	V_{a,g_3,g_5}	18	kV
Focusing electrode voltage	V_{g_4}	0 to 400	V [1]
Grid No.2 voltage	V_{g_2}	400	V
Cathode voltage for visual extinction of focused raster	V_k	36 to 66	V

LIMITING VALUES (Design centre rating system, unless otherwise stated)

Final accelerator voltage at $I_{a,g_3,g_5} = 0$	V_{a,g_3,g_5}	max.	18	kV
		min.	13	kV
Grid No.4 voltage,				
positive	V_{g_4}	max.	1000	V
positive peak	$V_{g_{4p}}$	max.	2500	V [2]
negative	$-V_{g_4}$	max.	500	V
Grid No.2 voltage	V_{g_2}	max.	700	V
		min.	350	V [3]
Grid No.1 voltage,				
positive	V_{g_1}	max.	0	V
positive peak	$V_{g_{1p}}$	max.	2	V
negative	$-V_{g_1}$	max.	150	V
negative peak	$-V_{g_{1p}}$	max.	400	V [2]

[1]) Voltage range to obtain optimum overall focus at 100 μA beam current.

[2]) Maximum pulse duration 22% of a cycle but maximum 1.5 ms.

[3]) At $V_{g_1/k} = 0$ V.

LIMITING VALUES (continued)

Cathode to grid No.1 voltage,				
positive	V_{k/g_1}	max.	150	V
positive peak	$V_{k/g_{1p}}$	max.	400	V [1]
negative	$-V_{k/g_1}$	max.	0	V
negative peak	$-V_{k/g_{1p}}$	max.	2	V
Cathode to heater voltage,				
positive	$V_{k/f}$	max.	200	V
positive peak	V_{k/f_p}	max.	300	V
negative	$-V_{k/f}$	max.	125	V
negative peak	$-V_{k/f_p}$	max.	250	V
positive during equipment warm-up period not exceeding 45 s	$V_{k/f}$	max.	410	V

CIRCUIT DESIGN VALUES

Grid No.4 current,				
positive	I_{g_4}	max.	25	μA
negative	$-I_{g_4}$	max.	25	μA
Grid No.2 current				
positive	I_{g_2}	max.	5	μA
negative	$-I_{g_2}$	max.	5	μA

MAXIMUM CIRCUIT VALUES

Resistance between cathode and heater	$R_{k/f}$	max.	1	MΩ
Impedance between cathode and heater	$Z_{k/f}$ (50 Hz)	max.	0.1	MΩ
Grid No.1 circuit resistance	R_{g_1}	max.	1.5	MΩ
Grid No.1 circuit impedance	Z_{g_1} (50 Hz)	max.	0.5	MΩ

[1]) Maximum pulse duration 22% of a cycle but max. 1.5 ms.

T.V. PICTURE TUBE

47 cm (19 in), 110°, rectangular direct vision picture tube with integral protection for black- and white T.V. The rimband leaves the edge of the faceplate free.

QUICK REFERENCE DATA		
Face diagonal	47	cm (19 in)
Deflection angle	110°	
Overall length	302.5	mm
Neck diameter	28.6	mm
Light transmission of face glass	48	%
Focusing		electrostatic
Bulb		reinforced
Heating	6.3 V, 300	mA

SCREEN

Metal backed phosphor		
Luminescence	white	
Light transmission of face glass	48	%
Useful diagonal	min. 446	mm
Useful width	min. 384	mm
Useful height	min. 305	mm

HEATING

Indirect by A.C. or D.C.: series or parallel supply

Heater current	I_f	300	mA
Heater voltage	V_f	6.3	V

If the tube is connected in a series heater chain the surge heater voltage must not exceed 9.5 V_{rms} when the supply is switched on.

MECHANICAL DATA

Dimensions in mm

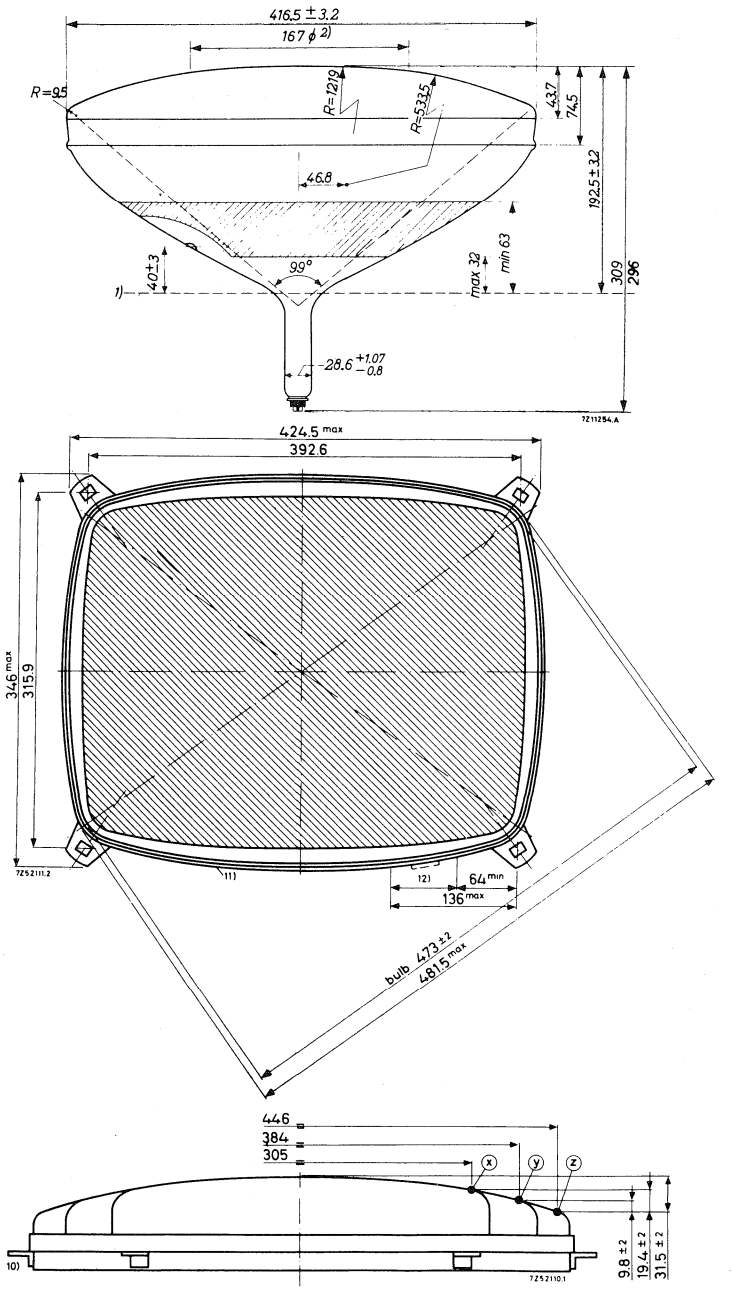

MECHANICAL DATA (continued)

Dimensions in mm

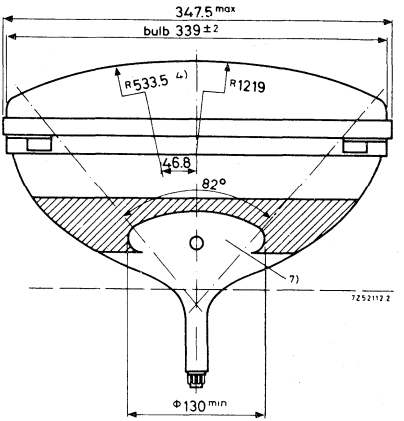

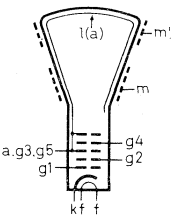

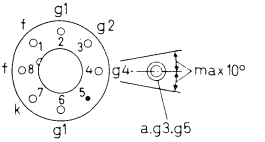

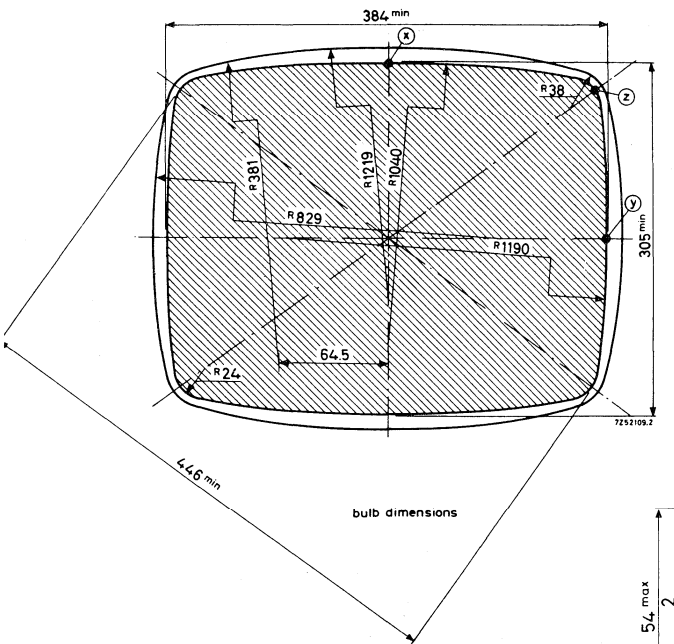

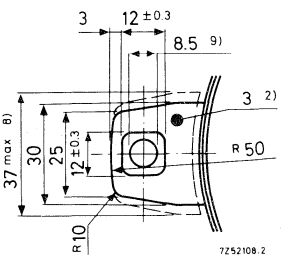

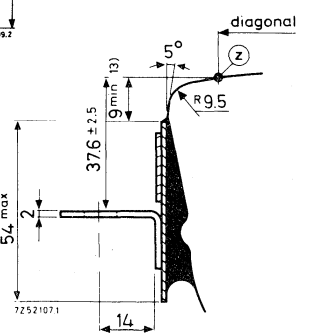

For notes see page 5.

Mounting position: any

Base : neo eightar 7 pin JEDEC B7-208, B8H, I.E.C.67-1-31a

Net weight : approx. 8 kg

The bottom circumference of the base wafer will fall within a circle concentric with the tube axis and having a diameter of 40 mm.

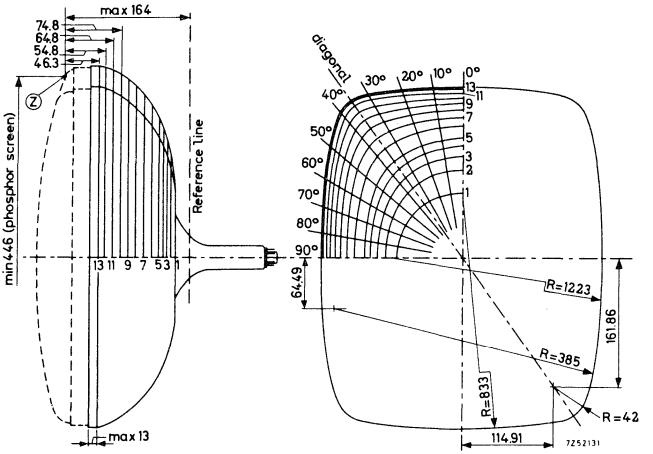

Section	Nom. distance from point "Z"	Distance from centre (max. values)										
		0° Long	10°	20°	30°	35° 22' Diagonal	40°	50°	60°	70°	80°	90° Short
1	145.7	75.0	75.0	75.0	75.0	75.0	75.0	75.0	75.0	75.0	75.0	75.0
2	139.8	106.1	105.6	105.6	103.8	102.7	101.6	99.1	96.2	93.7	92.4	92.4
3	134.8	125.3	125.7	124.6	122.3	120.6	118.9	115.1	111.0	106.7	104.2	103.9
4	129.8	138.2	138.9	137.8	136.0	134.3	132.3	127.5	121.8	117.0	113.7	113.0
5	124.8	148.6	149.0	148.5	147.7	146.3	144.2	138.0	131.3	125.2	121.6	120.6
6	114.8	164.5	164.6	165.2	167.3	166.8	164.6	156.0	146.8	139.0	134.5	133.1
7	104.8	176.5	176.6	178.7	183.4	184.0	181.4	170.2	158.9	149.8	144.6	142.9
8	94.8	186.3	186.5	190.3	197.0	198.9	195.8	182.3	169.0	158.9	152.8	151.1
9	84.8	194.2	195.0	200.2	209.1	212.0	208.6	192.5	177.5	166.2	159.8	157.9
10	74.8	200.7	202.1	208.4	219.6	223.5	219.7	200.4	184.2	172.3	165.8	163.4
11	64.8	206.0	208.0	215.0	227.9	232.8	228.6	206.6	189.2	176.9	170.0	167.9
12	54.8	210.0	212.3	219.6	233.0	238.1	233.9	210.9	193.2	180.5	173.6	171.3
13	46.3	212.25	214.68	222.18	235.43	240.5	236.68	214.1	195.79	182.93	175.79	173.5

NOTES TO OUTLINE DRAWING

1. Small cavity contact I.E.C.-67-III-2
2. The metal rimband must be earthed. The hole of 3 mm dia in each lug is provided for this purpose.
4. The screen radius of 533.5 mm applies also to the diagonal.
5. End of guaranteed contour. The maximum contour from reference line towards screen is given by the reference line gauge C (18.13 mm).
6. The configuration of the external conductive coating is optional but contains the contact area as shown in the drawing.
   The external conductive coating must be earthed.
7. This area must be kept clean.
8. Minimum space to be reserved for mounting lug.
9. The mounting screws in the cabinet must be situated inside a circle of 8.5 mm diameter drawn around the true geometrical positions, i.e. at the corners of a rectangle of 392.6 x 315.9 mm.
10. The displacement of any lug with respect to the plane through the other three lugs is max. 2 mm.
11. Max. curvatures of the outside tension band are nominal bulbradius +4 mm.
12. Area for clip on tension band. Max. thickness with respect to bulb 8 mm.
13. Distance from reference point Z to any hardware.

CAPACITANCES

Final accelerator to external conductive coating	$C_{a,g_3,g_5/m}$	<	1500	pF
		>	1000	pF
Final accelerator to metal band	$C_{a,g_3,g_5/m'}$		400	pF
Cathode to all	C_k		5	pF
Grid No. 1 to all	C_{g_1}		7	pF

FOCUSING electrostatic

DEFLECTION magnetic

Diagonal deflection angle	110°
Horizontal deflection angle	99°
Vertical deflection angle	82°

PICTURE CENTRING MAGNET

Field intensity perpendicular to the tube axis adjustable from 0 to 800 A/m (0 to 10 Oerstedt).
Maximum distance between centre of field of this magnet and reference line: 57 mm.

TYPICAL OPERATING CONDITIONS

Grid drive service

Final accelerator voltage	V_{a,g_3,g_5}	20	kV
Focusing electrode voltage	V_{g_4}	0 to 400	V [1]
Grid No. 2 voltage	V_{g_2}	400	V
Grid No. 1 voltage for visual extinction of focused raster	V_{g_1}	-40 to -77	V

Cathode drive service

Voltages are specified with respect to grid No. 1

Final accelerator voltage	V_{a,g_3,g_5}	20	kV
Focusing electrode voltage	V_{g_4}	0 to 400	V [1]
Grid No. 2 voltage	V_{g_2}	400	V
Cathode voltage for visual extinction of focused raster	V_k	36 to 66	V

[1] Individual tubes will have optimum focus within this range. In general acceptable pictures will be obtained with a fixed focus voltage.

LIMITING VALUES (Design centre rating system, unless otherwise stated)

Final accelerator voltage at $I_a, g_3, g_5 = 0$	V_a, g_3, g_5	max. min.	20 12	kV kV [1]
Grid No.4 voltage,				
positive	V_{g_4}	max.	1000	V
negative	$-V_{g_4}$	max.	500	V
Grid No.2 voltage	V_{g_2}	max. min.	700 350	V [3] V
Grid No.2 to grid No.1 voltage	V_{g_2/g_1}	max.	850	V
Grid No.1 voltage,				
positive	V_{g_1}	max.	0	V
positive peak	$V_{g_{1p}}$	max.	2	V
negative	$-V_{g_1}$	max.	150	V
negative peak	$-V_{g_{1p}}$	max.	400	V [2]
Cathode to heater voltage,				
positive	$V_{k/f}$	max.	250	V
positive peak	V_{k/f_p}	max.	300	V
negative	$-V_{k/f}$	max.	135	V
negative peak	$-V_{k/f_p}$	max.	180	V
positive during equipment warm-up period not exceeding 15 s	$V_{k/f}$	max.	410	V [4]

1) Absolute maximum rating system.

2) Maximum pulse duration 22% of a cycle but maximum 1.5 ms.

3) At $V_{g_1/k} = 0$ V.

4) Between 15 s and 45 s after switching on a decrease in k/f voltage, linear proportional with time, from 410 V to 250 V is permissible.

CIRCUIT DESIGN VALUES

Grid No.4 current,				
positive	I_{g_4}	max.	25	μA
negative	$-I_{g_4}$	max.	25	μA
Grid No.2 current,				
positive	I_{g_2}	max.	5	μA
negative	$-I_{g_2}$	max.	5	μA

MAXIMUM CIRCUIT VALUES

Resistance between cathode and heater	$R_{k/f}$	max.	1.0	MΩ
Impedance between cathode and heater	$Z_{k/f}$ (50 Hz)	max.	0.1	MΩ
Grid No.1 circuit resistance	R_{g_1}	max.	1.5	MΩ
Grid No.1 circuit impedance	Z_{g_1} (50 Hz)	max.	0.5	MΩ
Resistance between external conductive coating and rimband	$R_{m/m'}$	min.	2	MΩ

In order to avoid excessive hum, the A.C. component of the heater to chassis voltage should be as low as possible and must not exceed 20 V_{rms}.

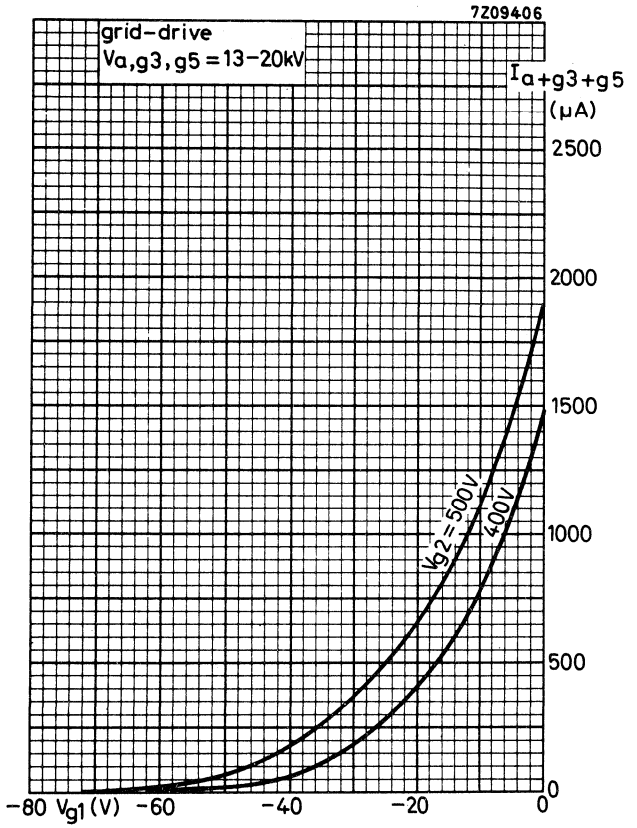

Final accelerator current as a function of grid No.1 voltage

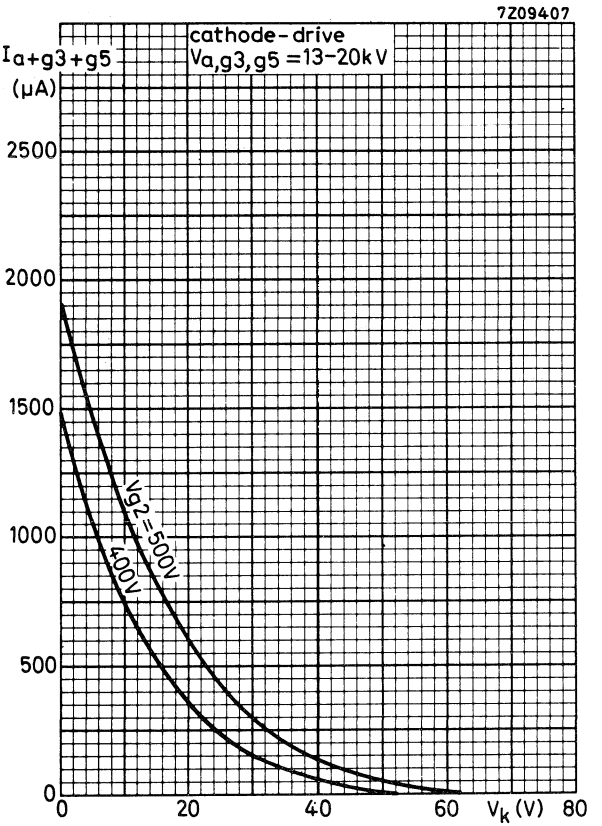

Final accelerator current as a function of cathode voltage

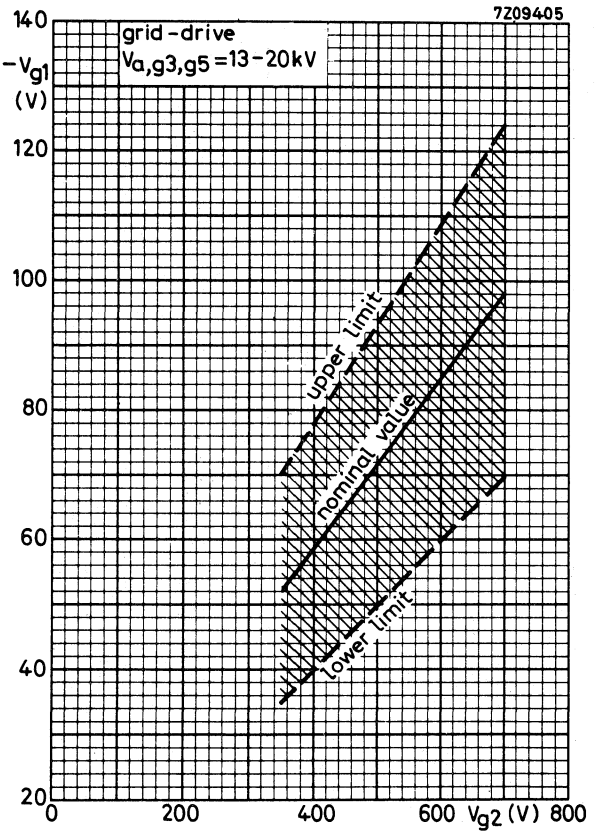

Limits of grid No.1 cut-off voltage as a function of grid No.2 voltage

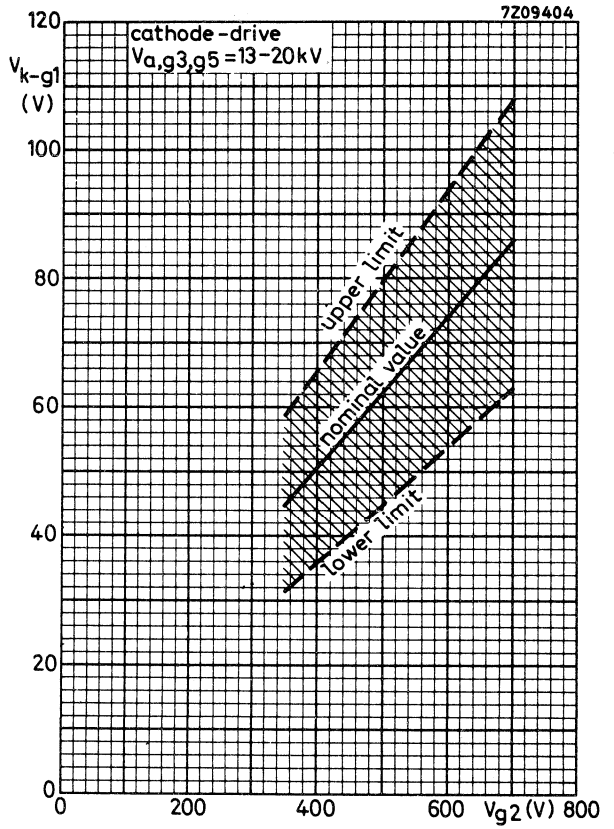

Limits of cathode cut-off voltage as a function of grid No. 2 voltage

T.V. PICTURE TUBE

50 cm (20 in), 110°, rectangular direct vision picture tube with integral protection for black-and-white T.V. The rimband leaves the edge of the faceplate free.

QUICK REFERENCE DATA	
Face diagonal	50 cm (20 in)
Deflection angle	110°
Overall length	312.5 mm
Neck diameter	28.6 mm
Light transmission of face glass	45 %
Focusing	electrostatic
Bulb	reinforced
Heating	6.3 V, 300 mA

SCREEN

Metal backed phosphor			
Luminescence	white		
Light transmission of face glass		45	%
Useful diagonal	min.	473	mm
Useful width	min.	394	mm
Useful height	min.	308	mm

HEATING

Indirect by A.C. or D.C.: series or parallel supply

Heater current	I_f	300	mA
Heater voltage	V_f	6.3	V

If the tube is connected in a series heater chain the surge heater voltage must not exceed 9.5 V_{rms} when the supply is switched on.

MECHANICAL DATA

Dimensions in mm

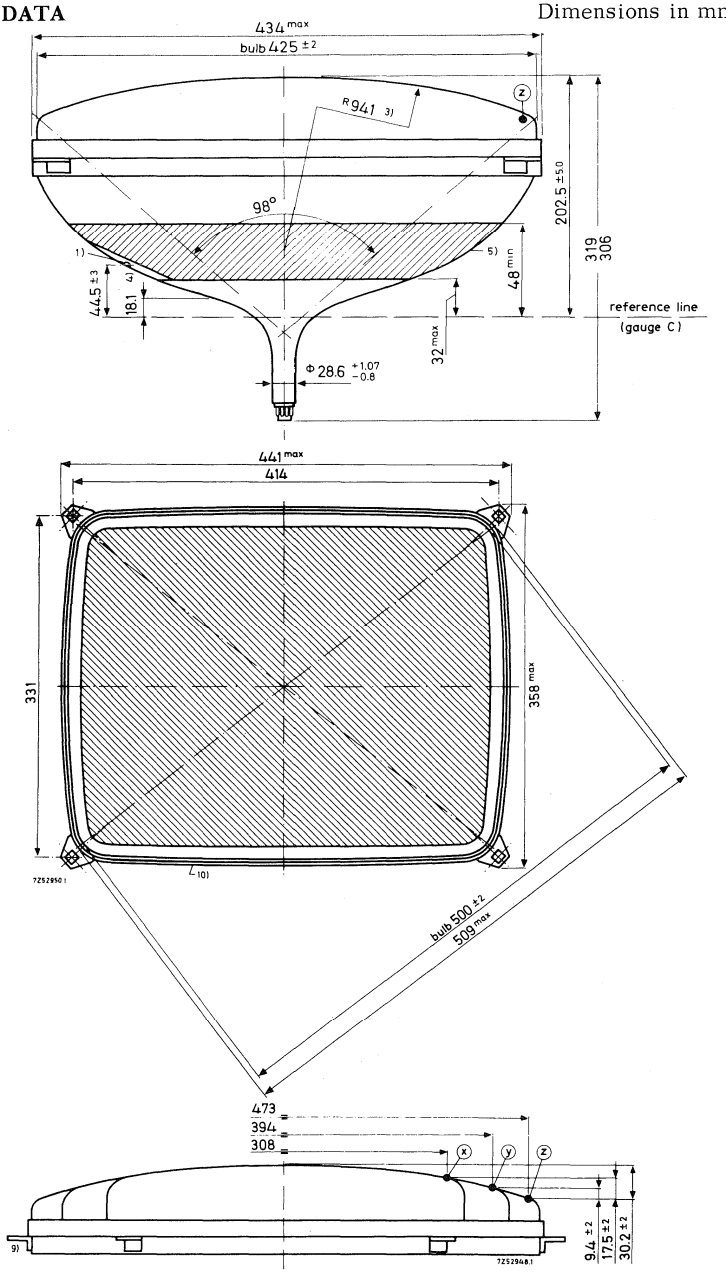

MECHANICAL DATA (continued)

Dimensions in mm

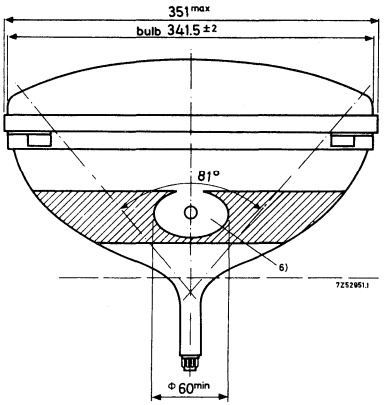

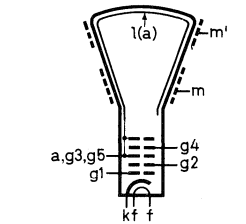

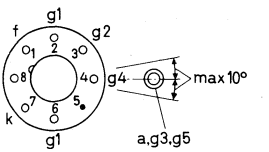

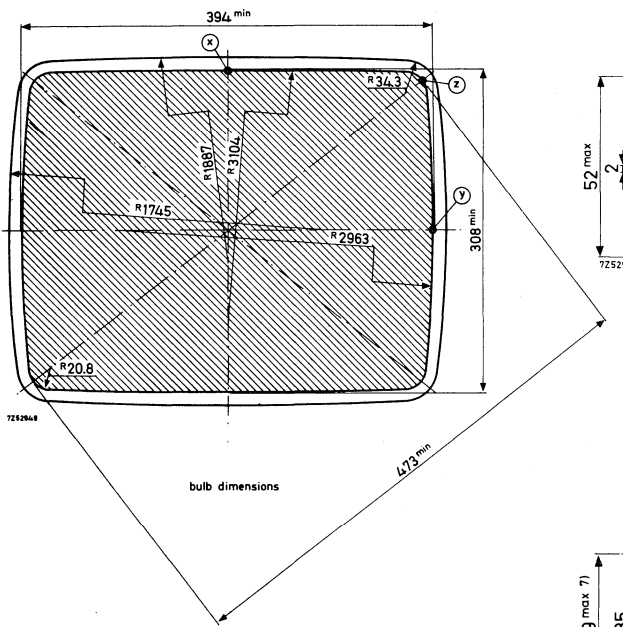

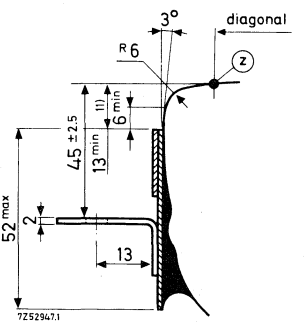

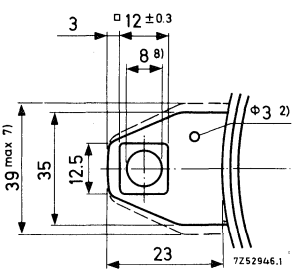

For notes see page 4

MECHANICAL DATA (continued) Dimensions in mm

Mounting position: any

Base : neo eightar 7 pin JEDEC B7-208, B8H, I.E.C. 67-1-31a

Net weight : approx. 8.5 kg

The bottom circumference of the base wafer will fall within a circle concentric with the tube axis and having a diameter of 40 mm.

NOTES TO OUTLINE DRAWING

1. Small cavity contact I.E.C. 67-III-2.
2. The metal rimband must be earthed. The hole of 3 mm dia in each lug is provided for this purpose.
3. Spherical face plate.
4. End of guaranteed contour. The maximum neck-and-cone contour is given by the reference line gauge C (18.13 mm).
5. The configuration of the external conductive coating may be different but contains the contact area as shown in the drawing.
   The external conductive coating must be earthed.
6. This area must be kept clean.
7. Minimum space to be reserved for mounting lug.
8. The mounting screws in the cabinet must be situated inside a circle of 8 mm diameter drawn around the true geometrical position i.e. at the corners of a rectangle of 414 mm x 331 mm.
9. The displacement of any lug with respect to the plane through the other three lugs is max. 2 mm.
10. Max. curvatures of the outside tension band are: nominal bulbradius + 4 mm.
11. Distance from reference point Z to any hardware.

MAXIMUM CONE CONTOUR DRAWING

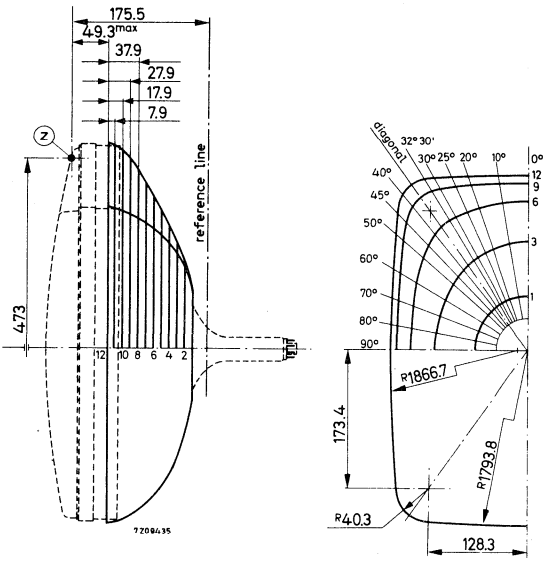

Section	Nom distance from point "Z"	Distance from centre (max. values)													
		0° Long	10°	20°	25°	30°	32° 30'	36° 30' Diagonal	40°	45°	50°	60°	70°	80°	90° Short
1	157.2	69	69	69	69	69	69	69	69	69	69	69	69	69	69
2	147.2	109.2	107.8	107.1	106.4	106	105.9	105.5	105	104.5	103.9	102.8	102.6	102.8	103.4
3	137.2	136.7	134.5	133.7	133	132.3	131.8	130.7	129.3	127.5	125.3	121.9	120.7	120.2	120.2
4	127.2	157.2	156.5	155.7	154.8	153.8	153	151.5	150	147.5	144.7	138.7	134.9	133.4	132.5
5	117.2	174.2	174	174.4	174.3	173.4	172.8	171	169.3	165.7	160.8	152	146.5	143.7	142.3
6	107.2	185.8	186.3	188.4	190	191.2	191.2	189.5	186.7	181.7	174.7	163.2	156	151.7	150.4
7	97.2	194.5	195.7	202.2	203.8	206.9	207.3	206.4	203.5	196.4	187.4	173	163.5	158.6	156.9
8	87.2	201.7	203.8	210.2	215.4	220.6	222.1	222.2	218.8	210.5	198.8	181.2	170.3	174.7	162.7
9	77.2	208.2	210.6	218.5	224.8	231.4	234.8	236.5	233.5	222.2	208.5	188.5	176.6	169.9	167.9
10	67.2	213.1	215.9	225.2	231.9	239.8	244.3	248.5	244.8	230.3	216	194.7	181.6	174.5	172
11	57.2	215.6	219	228.2	235.4	244.5	249.6	253.7	250.2	235.7	220.5	198.6	184.8	177.2	174.7
12	49.3	217	219.8	229.3	236.6	246	251.2	254.5	251.7	237.2	222	199.6	185.6	177.8	175.7

CAPACITANCES

Final accelerator to external conductive coating	$C_{a, g_3, g_5/m}$	<	1600	pF
		>	1100	pF
Final accelerator to metal band	$C_{a, g_3, g_5/m'}$		500	pF
Cathode to all	C_k		5	pF
Grid No.1 to all	C_{g_1}		7	pF

FOCUSING electrostatic

DEFLECTION magnetic

Diagonal	110°
Horizontal deflection angle	98°
Vertical deflection angle	81°

PICTURE CENTRING MAGNET

Field intensity perpendicular to the tube axis adjustable from 0 to 800 A/m (0 to 10 Oerstedt).
Maximum distance between centre of field of this magnet and reference line: 57 mm.

TYPICAL OPERATING CONDITIONS

Grid drive service

Final accelerator voltage	V_{a, g_3, g_5}	20	kV
Focusing electrode voltage	V_{g_4}	0 to 400	V 1)
Grid No.2 voltage	V_{g_2}	400	V
Grid No.1 voltage for visual extinction of focused raster	V_{g_1}	-40 to -77	V

Cathode drive service

Voltages are specified with respect to grid No.1

Final accelerator voltage	V_{a, g_3, g_5}	20	kV
Focusing electrode voltage	V_{g_4}	0 to 400	V 1)
Grid No.2 voltage	V_{g_2}	400	V
Cathode voltage for visual extinction of focused raster	V_k	36 to 66	V

1) Individual tubes will have optimum focus within this range. In general an acceptable picture will be obtained with a fixed focus voltage.

LIMITING VALUES (Design centre rating system, unless otherwise stated)

Final accelerator voltage at $I_a, g_3, g_5 = 0$	V_a, g_3, g_5	max. min.	20 12	kV kV 1)
Grid No.4 voltage,				
positive	V_{g4}	max.	1000	V
negative	$-V_{g4}$	max.	500	V
Grid No.2 voltage	V_{g2}	max. min.	700 350	V 3) V
Grid No.2 to grid No.1 voltage	$V_{g2/g1}$	max.	850	V
Grid No.1 voltage,				
positive	V_{g1}	max.	0	V
positive peak	V_{g1p}	max.	2	V
negative	$-V_{g1}$	max.	150	V
negative peak	$-V_{g1p}$	max.	400	V 2)
Cathode to heater voltage,				
positive	$V_{k/f}$	max.	250	V
positive peak	V_{k/f_p}	max.	300	V
negative	$-V_{k/f}$	max.	135	V
negative peak	$-V_{k/f_p}$	max.	180	V
positive during equipment warm-up period not exceeding 15 s	$V_{k/f}$	max.	410	V 4)

1) Absolute maximum rating system.

2) Maximum pulse duration 22% of a cycle but maximum 1.5 ms.

3) At $V_{g1/k} = 0$ V.

4) Between 15 s and 45 s after switching on a decrease in k/f voltage, linear proportional with time, from 410 V to 250 V is permissible.

CIRCUIT DESIGN VALUES

Grid No.4 current,			
positive	I_{g_4}	max. 25	μA
negative	$-I_{g_4}$	max. 25	μA
Grid No.2 current,			
positive	I_{g_2}	max. 5	μA
negative	$-I_{g_2}$	max. 5	μA

MAXIMUM CIRCUIT VALUES

Resistance between cathode and heater	$R_{k/f}$	max. 1.0	MΩ
Impedance between cathode and heater	$Z_{k/f}$ (50 Hz)	max. 0.1	MΩ
Grid No.1 circuit resistance	R_{g_1}	max. 1.5	MΩ
Grid No.1 circuit impedance	Z_{g_1} (50 Hz)	max. 0.5	MΩ
Resistance between external conductive coating and rimband	$R_{m/m'}$	min. 2	MΩ

In order to avoid excessive hum, the A.C. component of the heater to chassis voltage should be as low as possible and must not exceed 20 V_{RMS}.

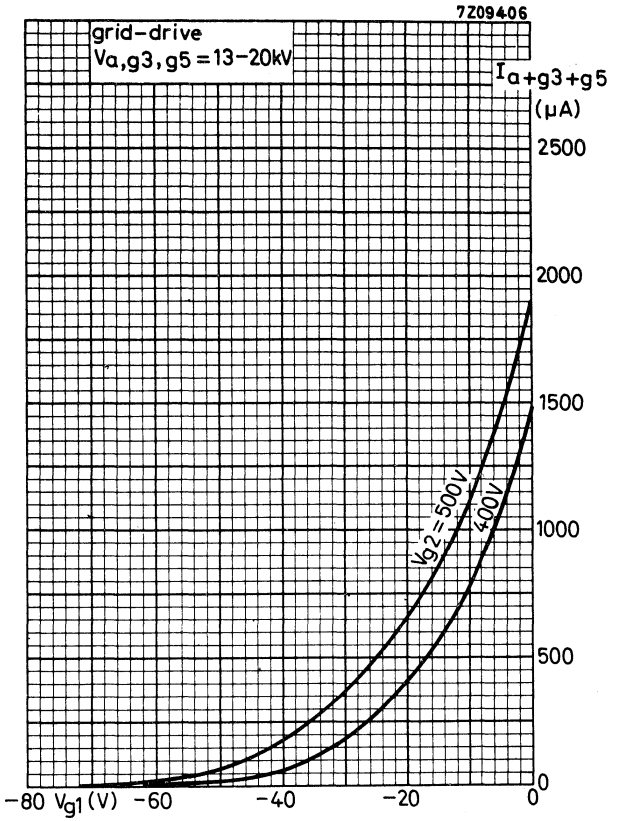

Final accelerator current as a function of grid No.1 voltage

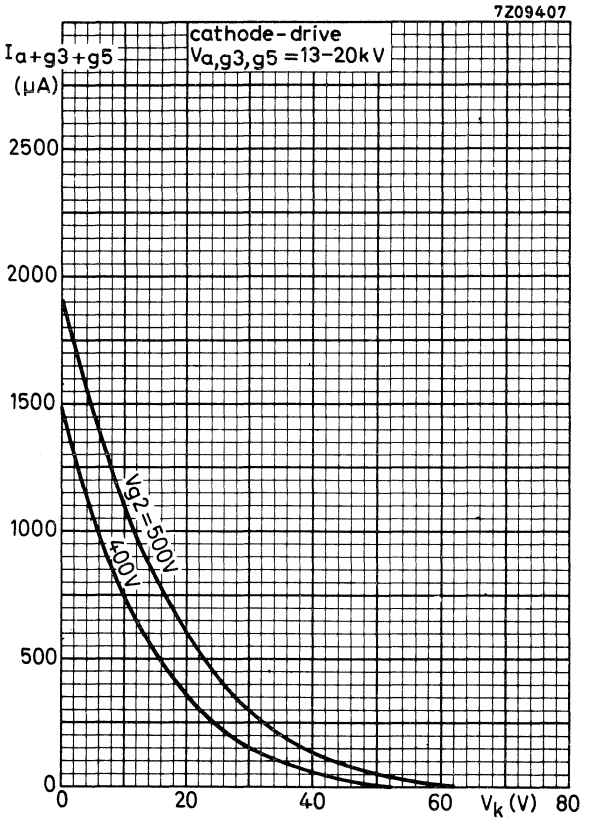

Final accelerator current as a function of cathode voltage

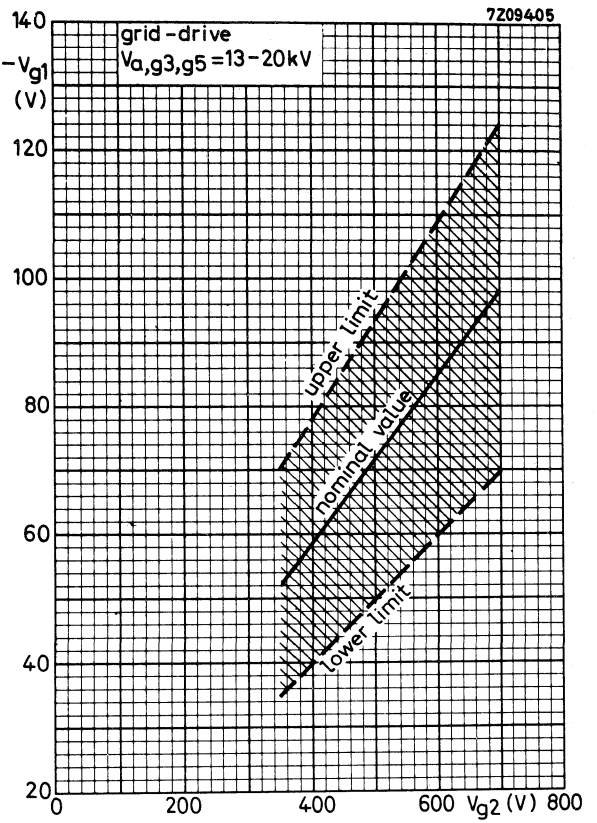

Limits of grid No.1 cut-off voltage as a function of grid No.2 voltage

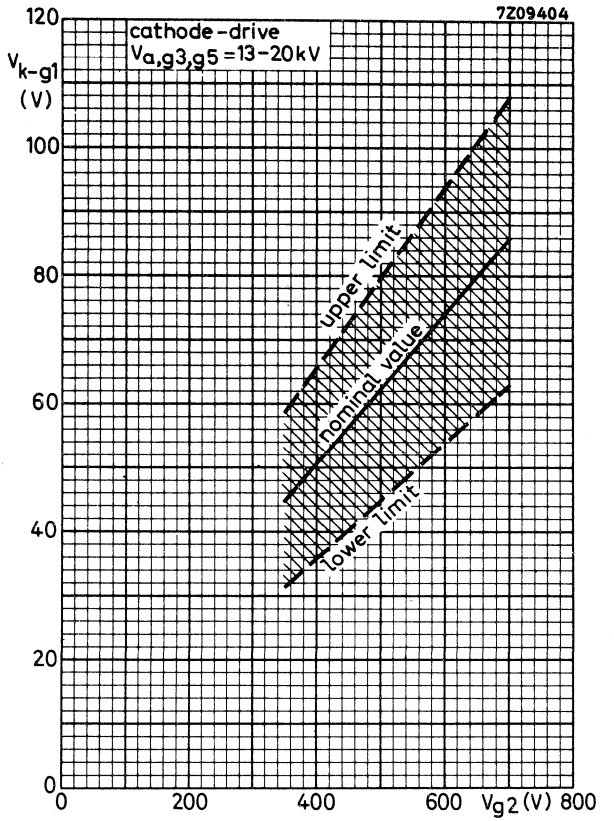

Limits of cathode cut-off voltage as a function of grid No.2 voltage

90° RECTANGULAR COLOUR TELEVISION PICTURE TUBE WITH INTEGRAL PROTECTION

Three-gun temperature-compensated shadow-mask rectangular colour television tube with electrostatic focus, magnetic deflection and convergence, metal-backed three-colour phosphor dot screen. A high white brightness is obtained by the use of improved red, green and blue phosphors at near unity current ratio. Being temperature compensated the shadow-mask makes for optimum field purity and good uniformity during warm-up. Minimum occurrence of the moiré effect is ensured by optimizing the mask for the reproduction of 625-line pictures. The tube has a reinforced envelope and therefore no separate safety screen is necessary. The rimband leaves the edge of the face plate free.

QUICK REFERENCE DATA		
TEMPERATURE-COMPENSATED SHADOW-MASK		
SHADOW-MASK OPTIMIZED FOR 625-LINE SYSTEM		
HIGH WHITE BRIGHTNESS AT UNITY CURRENT RATIO		
Face diagonal	56	cm
Deflection angle	92	o
Neck length	164.2	mm
Envelope	reinforced	
Focusing	electrostatic	
Deflection	magnetic	
Convergence	magnetic	
Heating	6.3 V, 900	mA
Light transmission of face glass	53	%

SCREEN

Metal-backed tricolour phosphor dots

Phosphor type — Red: Europium activated rare earth; Green and blue: sulphide type

Dot arrangement — Triangular

Spacing between centres of adjacent dot trios — 0.68 mm

Light transmission at centre of face glass — 53 %

HEATING

Indirect by A.C. or D.C.; parallel or series supply

Heater voltage	V_f	6.3	V
Heater current	I_f	900	mA

For maximum cathode life it is recommended that the heater supply be regulated at 6.3 V. If the tube is connected in a series heater chain the surge heater voltage must not exceed 9.5 V_{rms} when the supply is switched on.

CAPACITANCES

Final accelerator to external conductive coating	$C_{ag_5g_4/m}$	max.	2300	pF
		min.	1700	pF
Final accelerator to metal rimband	$C_{ag_5g_4/m'}$		400	pF
Grid No. 1 of any gun to all other electrodes	C_{g_1}		7	pF
Cathodes of all guns (connected in parallel) to all other electrodes	C_k		15	pF
Cathode of any gun to all other electrodes	C_{kR}		5	pF
	C_{kG}		5	pF
	C_{kB}		5	pF
Grid No. 3 (focusing electrode) to all other electrodes	C_{g_3}		7	pF

FOCUSING electrostatic

DEFLECTION magnetic

Diagonal deflection angle	92°
Horizontal deflection angle	79°
Vertical deflection angle	61°

CONVERGENCE magnetic

MECHANICAL DATA

Overall length			472.2 ± 9.5	mm
Neck lenght			164.2 ± 4.5	mm
Diagonal	of bulb		564.2 ± 2	mm
Horizontal axis	of bulb		484.3 ± 2	mm
Vertical axis	of bulb		379.8 ± 2	mm
Useful screen diagonal		min.	533	mm
horizontal axis		min.	447	mm
vertical axis		min.	337	mm

Mounting position: any

Net weight: approx. 150 N (15 kg)

Base: 12 pin base JEDEC B12-244 but with a 5 mm shorter spigot.

Anode contact: Small cavity contact J1-21, IEC 67-III-2.

MECHANICAL DATA (continued)

Magnetic shielding:

Magnetic shielding should be provided by means of a metal shield extending 24 cm over the cone of the tube measured from the centre of the face plate. The metal shell is preferably constructed of min. 0.5 mm cold rolled steel properly annealed. The air gap between the shield and the metal rimband should be as small as possible and not exceed 10 mm. The magnetic shield should be connected to the outer conductive coating.

NOTES TO OUTLINE DRAWING(See pages 4 and 5)

1. Reference line, determined by the plane of the upper edge of the flange of the reference line gauge, when the gauge is resting on the cone. Gauge see page 10.
2. The socket for this base should not be rigidly mounted; it should have flexible leads and be allowed to move freely. Bottom circumference of base will fall within a circle concentric with bulb axis and having a diameter of 55 mm.
3. Configuration of outer conductive coating may be different, but will contain the contact area as shown in the drawing.
4. To clean this area, whipe only with a solft dry lintless cloth.
5. The displacement of any lug with respect to the plane through the three other lugs is max. 2 mm.
6. Minimum space to be reserved for mounting lug.
7. The position of the mounting screw in the cabinet must be within a circle of 9.5 mm diameter drawn around the true geometrical positions, i.e. the corners of a rectangle of 476.5 mm x 370 mm.
8. Coördinates for radius R = 16 mm : x = 203.92 mm, y = 145.50 mm.

MECHANICAL DATA (continued)

Dimensions in mm

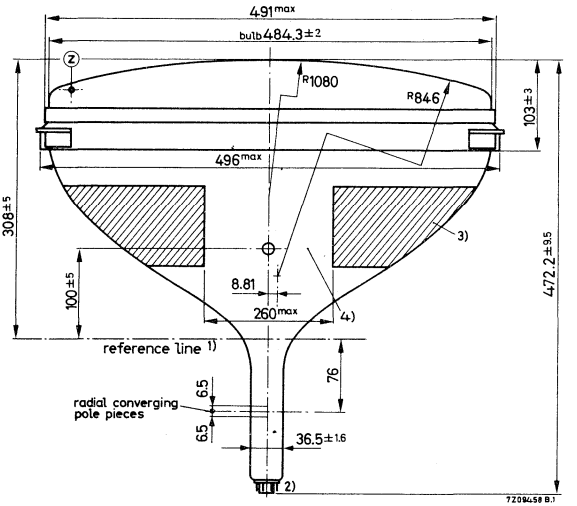

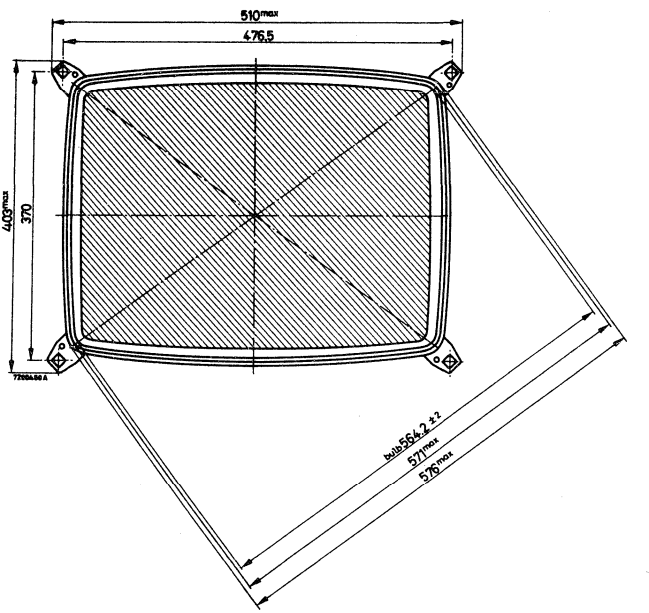

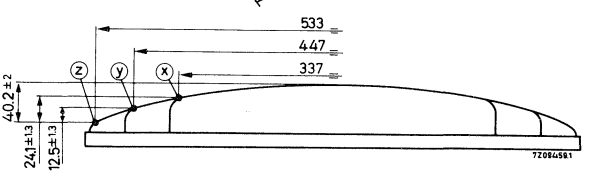

Notes see page 3.

MECHANICAL DATA (continued)

Dimensions in mm

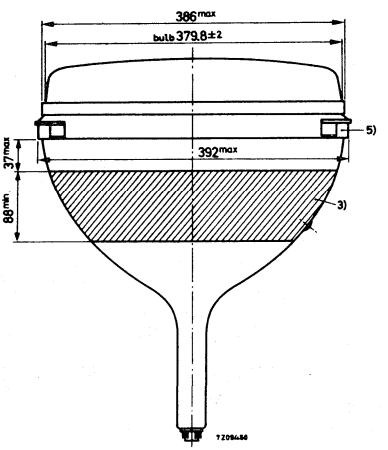

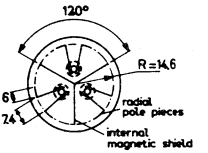

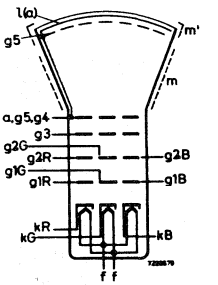

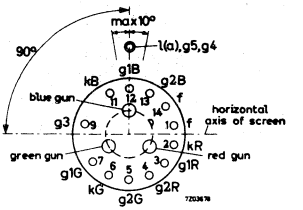

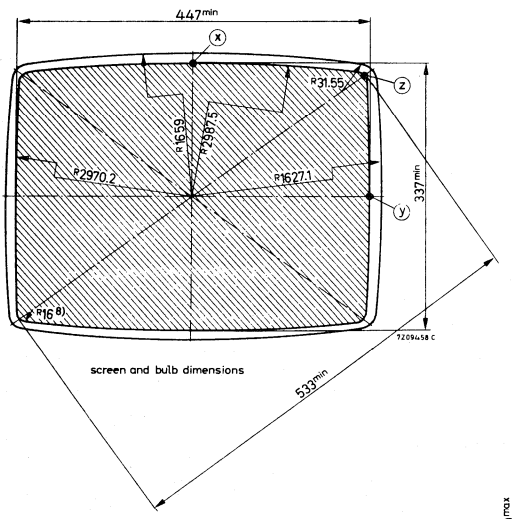

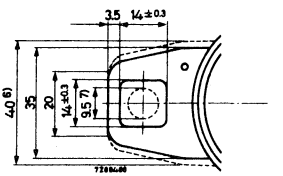

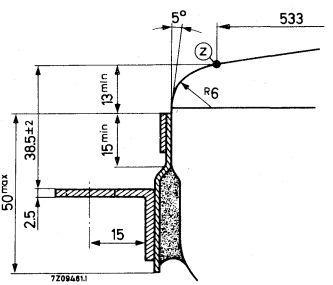

Notes see page 3.

MAXIMUM CONE CONTOUR DRAWING

Dimensions in mm

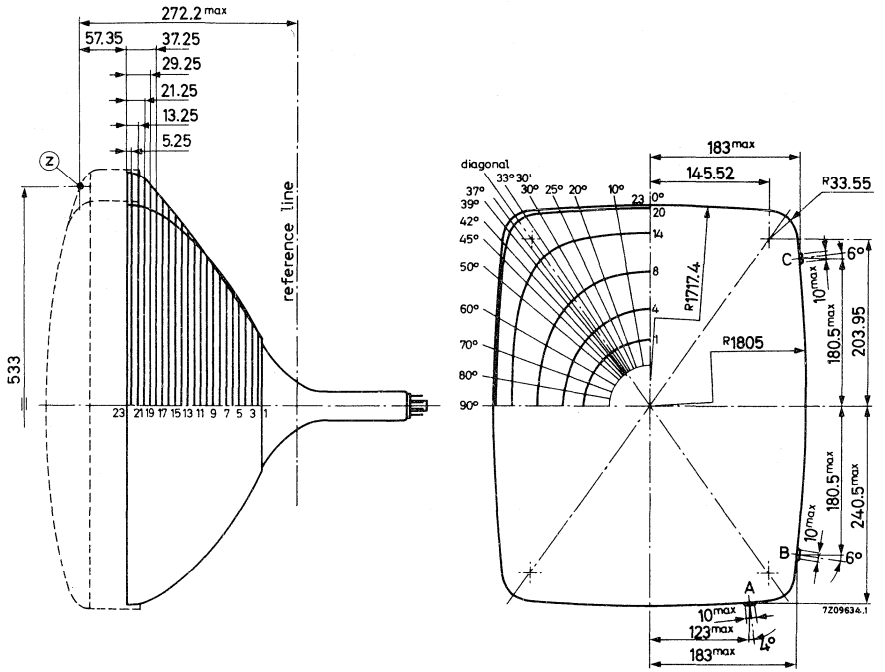

Section	Nom. distance from point "Z"	Distance from centre (max. values)																
		0° Long	10°	20°	25°	30°	33° 30'	35° 30' 29.4" Diagonal	37°	39°	42°	45°	50°	60°	70°	80°	90° Short
1	227.20	79.87	79.87	79.87	79.87	79.87	79.87	79.87	79.87	79.87	79.87	79.87	79.87	79.87	79.87	79.87	79.87
2	222.60	87.66	87.64	87.57	87.52	87.47	87.43	87.41	87.39	87.37	87.34	87.31	87.26	87.18	87.13	87.09	87.09
3	214.60	103.28	102.93	102.07	101.53	100.96	100.55	100.32	100.15	99.93	99.6	99.29	98.82	98.06	97.58	97.35	97.3
4	206.60	117.96	117.41	115.98	115.05	114.03	113.3	112.87	112.56	112.13	111.51	100.91	109.95	108.3	107.1	106.4	106.18
5	198.60	130.96	130.45	128.93	127.85	126.6	125.65	125.08	124.66	124.08	123.2	122.33	120.89	118.27	116.19	114.86	114.39
6	190.60	142.65	142.33	141.09	140.04	138.72	137.64	136.97	136.46	135.74	134.64	133.49	131.56	127.85	124.78	122.75	122.02
7	182.60	153.27	153.25	152.55	151.7	150.43	149.3	148.56	147.97	147.14	145.8	144.39	141.92	137.01	132.86	130.1	129.12
8	174.60	163	163.32	163.37	162.85	161.77	160.64	159.85	159.21	158.27	156.71	155	151.94	145.71	140.44	136.96	135.73
9	166.60	172.07	172.74	173.65	173.55	172.76	171.69	170.88	170.18	169.14	167.34	165.31	161.59	153.95	147.53	143.36	141.9
10	158.60	180.58	181.6	183.42	183.83	183.42	182.46	181.64	180.9	179.75	177.69	175.3	170.86	161.7	154.13	149.32	147.66
11	150.60	188.58	189.94	192.7	193.7	193.75	192.97	192.15	191.37	190.1	187.73	184.95	179.7	168.95	160.29	154.88	153.04
12	142.60	196.14	197.8	201.52	203.14	203.76	203.22	202.42	201.59	200.19	197.46	194.21	188.09	175.72	166	160.06	158.06
13	134.60	203.27	205.21	209.87	212.17	213.45	213.24	212.46	211.59	210.03	206.86	203.08	196.01	182.01	171.31	164.88	162.75
14	126.60	210.01	212.21	217.77	220.78	222.82	223.01	222.29	221.36	219.63	215.93	211.53	203.43	187.81	176.21	169.37	167.11
15	118.60	216.38	218.82	225.24	228.98	231.87	232.56	231.9	230.91	228.98	224.64	219.53	210.33	193.14	180.74	173.53	171.17
16	110.60	222.42	225.06	232.28	236.75	240.58	241.89	241.31	240.25	238.08	232.98	227.06	216.69	198.01	184.9	177.38	174.94
17	102.60	228.13	230.96	238.91	244.11	248.96	251	250.52	249.39	246.93	240.93	234.08	222.49	202.42	188.71	180.94	178.42
18	94.60	233.31	236.3	244.94	250.88	256.89	259.85	259.54	258.35	255.57	248.48	240.57	227.71	206.38	192.18	184.21	181.64
19	86.60	237.31	240.42	249.69	256.43	263.92	268.3	268.38	267.22	264.13	255.69	246.51	232.3	209.86	195.3	187.2	184.6
20	78.60	240.24	243.42	253.18	260.67	269.8	276.08	276.83	275.86	272.51	262.37	251.68	236.1	212.8	198.05	189.9	187.29
21	70.60	242.23	245.43	255.39	263.22	273.18	280.54	281.74	280.94	277.51	266.4	254.86	238.59	214.9	200.06	191.89	189.28
22	62.60	243.35	246.56	256.59	264.5	274.68	282.32	283.65	282.92	279.49	268.16	256.4	239.94	216.11	201.22	193.02	190.4
23	57.35	243.81	247.03	257.06	264.98	275.16	282.78	284.11	283.38	279.97	268.68	256.95	240.49	216.63	201.71	193.49	190.86

TYPICAL OPERATING CONDITIONS

Final accelerator voltage	V_{a,g_5,g_4}	25	kV
Grid No.3 (focusing electrode) voltage	V_{g_3}	4.2 to 5	kV
Grid No.2 voltage for a spot cut-off voltage V_{g_1} = −105 V	V_{g_2}	210 to 495	V [1]
Grid No.1 voltage for spot cut-off at V_{g_2} = 300 V	V_{g_1}	−70 to −140	V [2]
Brightness at the centre of the screen		See page 21	

EQUIPMENT DESIGN VALUES (each gun if applicable)

Valid for final accelerator voltages between 20 kV and 27.5 kV.

Grid No.3 (focusing electrode) voltage	V_{g_3}	16.8 to 20 % of final accelerator voltage	
Grid No.2 voltage [1]	V_{g_2}	See cut-off design chart page 22	
Grid No.1 voltage for visual extinction of focused spot (cut-off voltage) [2]	V_{g_1}	See cut-off design chart page 22	
Difference in cut-off voltages between guns in any tube	ΔV_{g_1}	lowest value is min. 65 % of highest value	
Grid No.3 (focusing electrode) current	I_{g_3}	−15 to +15	μA
Grid No.2 current	I_{g_2}	−5 to +5	μA
Grid No.1 current at V_{g_1} = −150 V	I_{g_1}	−5 to +5	μA

To produce white of the following CIE coördinates		3)	4)	5)	
	x	0.310	0.265	0.281	
	y	0.316	0.290	0.311	
Percentage of total anode current supplied by each gun (typical)					
red gun		43.5	27.9	32.2	%
green gun		30.0	34.9	35.6	%
blue gun		26.5	37.2	32.2	%
Ratio of anode currents red gun to green gun	min.	1.05	0.60	0.65	
	av.	1.45	0.80	0.90	
	max.	2.00	1.10	1.25	
Ratio of anode current red gun to blue gun	min.	1.20	0.55	0.75	
	av.	1.65	0.75	1.00	
	max.	2.25	1.05	1.35	

Notes see page 8.

EQUIPMENT DESIGN VALUES (continued)

Required centring, measured at the centre of the screen in any direction	max. 13 mm
Correction which must be supplied by purifying magnet to compensate for mis-register (including caused by earth's magnetic field) when using recommended components. Measured at the centre of the screen in any direction.	max. 115 μm
Lateral distance between the blue spot and the converged red and green spots	max. 6 mm (in both directions)
Radial convergence displacement excluding effects of dynamic convergence (each beam)	max. 9 mm [6] (in both directions)

---

1) This range of V_{g_2} has to be used when in circuit design fixed values for cut-off of the three guns are used.

2) This range of V_{g_1} has to be used when in circuit design fixed values for V_{g_2} of the three guns are used.

3) To produce colour pictures with the best possible quality, this white point should be used as the transmission systems are based on this point. (Point C)

4) To produce black/white pictures a more bluish white point would be preferable. This white point corresponds virtually with the white point of current black/white picture tubes.

5) This point is a compromise between the white point C and the white point x = 0.265 and y = 0.290, given in order to enable good rendition of colour and black-and-white pictures with one white point.

6) Dynamic convergence to be effected by currents of approximately parabolic waveshape synchronized with scanning.

LIMITING VALUES (Each gun if applicable) (Design centre rating system unless otherwise specified)

Final accelerator voltage	V_{a,g_5,g_4}	max.	27.5	kV [1)2)3)]
		min.	20	kV [1)4)]
Average current for 3 guns	I_a	max.	1000	μA [5)]
Grid No. 3 (focusing electrode) voltage	V_{g_3}	max.	6000	V
Grid No. 2 voltage, peak, including video signal voltage	$V_{g_{2p}}$	max.	1000	V
Grid No. 1 voltage,				
negative	$-V_{g_1}$	max.	400	V
negative, operating cut-off	$-V_{g_1}$	max.	200	V
positive	V_{g_1}	max.	0	V
positive peak	V_{g_1}	max.	2	V
Cathode to heater voltage,				
positive	V_{kf}	max.	250	V [6)7)]
positive peak	V_{kf_p}	max.	300	V
negative	$-V_{kf}$	max.	135	V
negative peak	$-V_{kf_p}$	max.	180	V

1) Absolute max. rating system.

2) The X-ray dose rate remains below the acceptable value of 0.5 mr/h, measured with ionization chambre when the tube is used within its limiting values.

3) For optimal operating conditions the final accelerator voltage has to be stabilized. Therefore its absolute maximum value can be approached in actual operation and for this reason this value is given instead of the design centre value. During adjustment on the production line this value is likely to be surpassed considerably. It is therefore strongly recommended to first make the necessary adjustments for normal operation without picture tube.

4) Operation of the tube at lower voltages impairs the brightness and resolution and may have a detrimental effect on colour purity.

5) 1500 μA permitted provided a current limiting circuit is used.

6) In order to avoid excessive hum the a.c. component of the heater to chassis voltage should be as low as possible and must not exceed 20 V_{rms}.

7) During an equipment warm-up period not exceeding 15 s V_{kf} is allowed to rise to 410 V. Between 15 s and 45 s after switching on a decrease in V_{kf} proportional with time from 410 V to 250 V is permissible.

REMARK

With the high voltage used with this tube (max. 27.5 kV) internal flash overs may occur, which may destroy the cathode(s). Therefore it is necessary to provide protective circuits, using spark gaps.
The sparkgaps must be connected as follows:

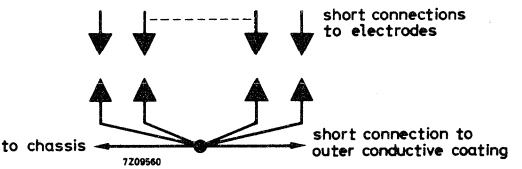

No other connections between the outer conductive coating and the chassis are permissible.
Additional information available on request.

REFERENCE LINE GAUGE

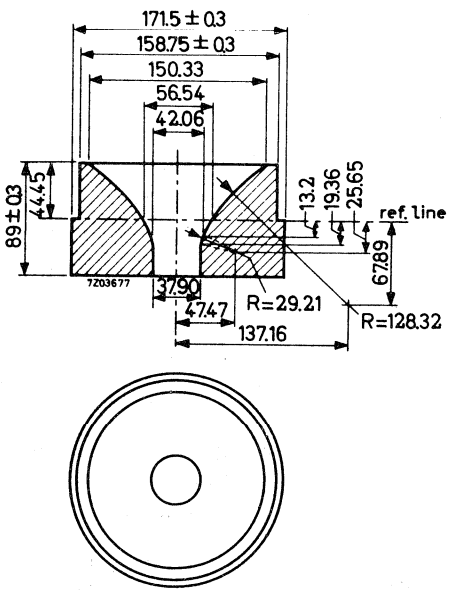

DESCRIPTION OF THE TUBE

The A56-120X is a rectangular temperature compensated shadow-mask colour picture tube for use in colour television receivers. The tube can display a picture, either in full colour or in black and white, on an almost rectangular, almost flat screen, with rounded-off corners of small curvature. Mounting the tube with the screen protruding through the cabinet front is possible since the rimband is clamped some distance from the screen edge. The minimum useful screen area measures 447 mm x 337 mm and has a projected area of 1471 cm^2

The A56-120X has

- a deflection angle of 92°
- a neck diameter of 36.5 mm
- a three-colour phosphor dot screen, composed of closely spaced dots in a regular pattern of tri-angular groups, each containing a red, a green and a blue light emitting dot.
- Three electron guns with axes tilted towards the screen centre, with electrostatic focusing systems and mounted side by side in the neck of the tube 120° apart.

Colour selection is effected by a metal graded-hole shadow mask positioned in front of the tricolour phosphor-dot screen. This mask is aligned with the dot pattern so that the electron beam from each gun lands only on phosphor dots of the associated colour.

The shadow mask has graded holes that increase gradually in diameter from the edge of the mask towards the centre. Grading enables correct purity to be achieved over the whole screen with minimum adjustment.

Although the three guns are tilted towards the screen centre so that their axes intersect at the shadow mask, lateral and radial convergence are necessary to ensure correct convergence over the entire screen. Each of the three guns is therefore provided with a pair of radial converging pole pieces.

Radial convergence can be achieved by means of magnets and coils mounted externally on the neck of the tube. The magnetic flux provided is coupled through the glass neck of the tube to associated internal pole pieces. The shape of the pole pieces, together with the internal magnetic shielding, is shown in Fig.1. Internal shielding prevents interaction of the various magnetic fields.

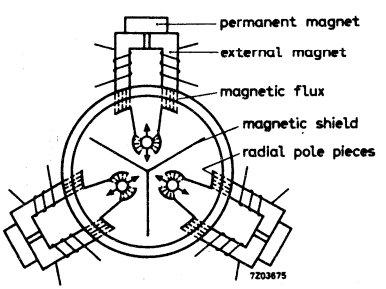

Fig.1

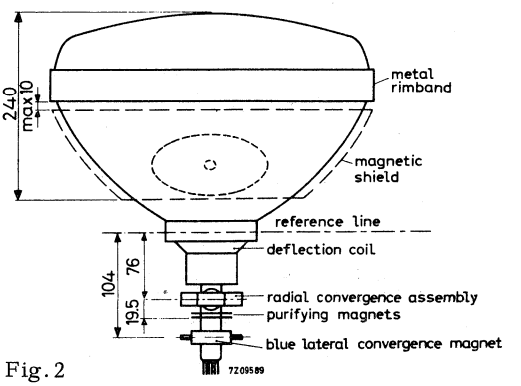

Fig.2

Fig.2 shows the position of the components on the neck of the tube.
Lateral convergence is achieved by a separate assembly mounted on the neck of the tube. This assembly causes horizontal movement of the blue beam, and simultaneously, movements of the red and green beams in the opposite direction.
Facilities for dynamic blue lateral convergence are also provided in this convergence assembly.

APPLICATION NOTES

1. Magnetic shielding

The tube should be fitted with a magnetic shield around the cone, to minimize the effects of external magnetic fields, including the horizontal, vertical and axial components of the earth's magnetic field. The latter so influences the colour purity that compensation by means of the purifying magnets is not possible.
The metal shield should preferably be constructed of coldrolled steel, at least 0.5 mm thick and properly annealed at 850 °C. Since the tube re-inforcing band is an essential part of the magnetic circuit used for degaussing, the air gap between the band and the shield should be as small as possible and certainly not more than 10 mm. To be effective, the shield must be degaussed as described under "Adjustment procedures". Building-in of an automatic degaussing system is advised.

2. Centring of raster on the screen.

Raster centring in a shadow-mask colour picture tube is achieved by passing direct current of the required value through each pair of deflection coils. The values for raster displacement given in the data apply when all components are properly adjusted.

3. Component considerations.

The necessary components are the deflection coil, the radial convergence assembly, the purifying magnets and the blue lateral convergence magnet.
Basically the functions of the components are:
- deflection of the three beams over the entire screen: deflection coil.
- good convergence of the three beams over the screen: radial convergence assembly and blue lateral convergence magnet.
- landing adjustment: purifying magnets and deflection coil

The mounting positions of the components are as follows:

The deflection coil: in such a way that its deflection centre coincides with the one used in the screen-laying process during manufacturing. The coil must therefore be designed so that sufficient movement in the axial direction is possible.

The radial convergence assembly: with its pole pieces centred above the convergence pole pieces inside the tube. Initially, the assembly should be mounted upright. Small rotations of the whole assembly influence the convergence and can be used during adjustment of the blue lateral correction to obtain optimum lateral convergence.

APPLICATION NOTES (continued)

The purifying magnets: over the gap between the electrode g3 and g4 of the gun, or still closer to the deflection coil. Placing the purifying magnets closer to the base results in poorer performance as the spot quality is adversely affected.

The blue lateral convergence magnet: as near as possible to the rear side of the purifying magnets but not shifted backwards more than halfway along electrode g3 of the gun.

3.1 Convergence

Static convergence, i.e. convergence of the three beams onto the centre of the screen, is usually accomplished with permanent magnets which are part of the radial convergence assembly, or with D.C. currents through the convergence coils in combinations with the lateral converging magnet.
The strength of the magnetic field that is adjustably coupled to the radial convergence pole pieces of the gun should be such that each beam can be moved 9 mm in both directions towards the centre of the screen excluding effects of dynamic convergence. The static blue lateral convergence magnet should provide a magnetic field adjustable in magnitude and polarity.
This field exerts a directive force on the blue beam and simultaneously a force in the opposite direction on the green and the red beams.
The displacement of the blue beam opposite to the movement of the red and green beams should be 6 mm in both directions.
With these four adjustable magnetic fields static convergence of the three beams can be attained.
For good convergence over the entire screen dynamic radial convergence is required together with a small amount of dynamic lateral convergence in line direction.
The radial convergence assembly consists fundamentally of three cores with associated windings. Through the windings are passed the necessary currents for maintaining convergence when the beams are deflected over the screen.
The required form of the currents can be obtained by adding a current with a sawtooth wave form to one with a parabolic wave form. Two separate windings are required for correction in the horizontal and the vertical direction. The parabolic and sawtooth currents should be adjustable in amplitude and the sawtooth currents and the vertical blue parabola should, in addition be adjustable in polarity.
The blue lateral convergence magnet consists of a core and associated windings to obtain dynamic lateral convergence in line direction.

3.2 Landing

Landing is defined as the relative position of each beam with respect to its associated phosphor dot.
Good landing is achieved when each beam excites only its associated colour phosphor dot.
Optimum landing is achieved by adjusting both the purifying magnets and the deflection coil.

APPLICATION NOTES (continued)

3.2.1 Purifying magnets

Purifying magnets are required to compensate for the effects of outside magnetic fields, (including the earth's magnetic field), and manufacturing variations, which could cause mislanding.
Such purifying magnets, designed to provide a magnetic field adjustable in magnitude and direction, effect good landing over the entire screen when the deflection coil position is properly adjusted.

3.2.2 Deflection coil

The position of the deflection centre must be adjustable to make sure that proper landing can be attained in any set. To achieve this the deflection coil should be free to move along the neck over a minimum distance of 12 mm from its most forward position when the purity adjustment is made with the aid of a microscope, or about 20 mm if purity is adjusted by means of the so-called "red ball" method. (See 6.1.2.1.)

4. Drive requirements

To calculate the drive voltages which should be supplied to the tube the following points should be taken into account.

4.1 In presently known systems the luminance signal is composed as follows:
$Y = 0.30R + 0.59G + 0.11B$.
The colour information is carried by two chrominance signals which in the receiver after subcarrier detection, deliver the so-call colour difference signals R-Y, G-Y and B-Y.
These have to be combined with the Y-signal in a matrix circuit to recover the original red, green and blue signals. With the aid of the luminance signal equation it is possible to calculate the maximum voltage ranges for the colour difference signals. The maximum values are reached when the primary colours and their complementaries are produced at maximum brightness.
These values are tabulated below. All values are referred to the maximum value Y=R=G=B=1 for peak white and are considered positive if they cause an increase in beam current.

Colour	R	G	B	Y	R-Y	G-Y	B-Y
Red	1	0	0	0.3	0.7	-0.3	-0.3
Green	0	1	0	0.59	-0.59	0.41	-0.59
Blue	0	0	1	0.11	-0.11	-0.11	0.89
Cyan	0	1	1	0.7	-0.7	0.3	0.3
Magenta	1	0	1	0.41	0.59	-0.41	0.59
Yellow	1	1	0	0.89	0.11	0.11	-0.89

APPLICATION NOTES (continued)

Signal	Minimum	Maximum	Total range
R-Y	-0.7	0.7	1.4
G-Y	-0.41	0.41	0.82
B-Y	-0.89	0.89	1.78

In practice the saturation of the colours is lower than that of the primary colours as considered above, so that the demands on the colour difference signals can be lower than those indicated.

4.2 The combining of the Y-signal with the R-Y, G-Y and B-Y signals can be performed by two methods:

Method 1. Letting the picture tube perform the matrix function by driving the cathodes with the luminance signal while putting the colour difference signals onto the three first grids of the picture tube. (colour difference drive)

Method 2. By means of a separate matrix circuit that delivers red, green and blue signals to the picture tube. (R.G.B. drive). If fed to the three cathodes these signals attain the same maximum amplitudes as the Y-signal in the first method, and it should be remembered that each channel requires full video bandwidth.
In both methods it should be recognized that with cathode drive a higher slope is obtained than with grid drive and to compensate for this higher drive voltages are required for grid drive in each case. For grid drive the relation between grid drive voltage (V_{drg}) and beam current (I_a) is approximately:

$$I_a = k \frac{V_{drg}^3}{V_{cog}^{3/2}}$$

(I_a in μA)
(V_{cog} is cut-off voltage for grid drive)
(k = k factor)

For cathode drive this function reads:

$$I_a = \frac{k\,(1+D)^3}{\left(1 + D\frac{V_{drk}}{V_{cok}}\right)^{3/2}} \cdot \frac{V_{drk}^3}{(V_{cok})^{3/2}}$$

(V_{drk} = cathode drive voltage)
(V_{cok} = cut-off voltage for cathode drive)
(D = penetration factor)

This shows that there is a difference in sensivity between the two drive techniques, and that the relationship between them is not strictly linear. In practice the best result is obtained if the gridsignal amplitudes are made 20% larger than the corresponding cathode signal amplitudes.

4.3 Unequal currents are required for the red, green and blue signals to produce white as the efficiencies of the red, green and blue phosphors are different. (See Equipment Design Values)

4.4 Spread occuring in picture tube properties:
(1) k factor, (2) penetration of g2 (D) and (3) phosphor efficiencies.

APPLICATION NOTES (continued)

(1) The k factor, having a nominal value of 3.0, spreads between 2.6 and 3.1 but it can be derived from the $I_a = f(V_{dr})$ graph for cathode drive that compensation for this spread is attainable when the luminance drive stage is capable of producing approx. 6 volts more than the nominal peak drive needed for the red gun.

(2) The penetration D may spread from 0.18 to 0.40 with a nominal value of 0.29 and is experienced as a spread in V_{co}. It can be offset - if required - by adjustment of V_{g_2} (See page 22).

(3) Phosphor efficiencies: the ratios of cathode currents for white having, for example, CIE x and y coordinates:
x = 0.281 and y = 0.311, may spread as follows:

$\frac{I_R}{I_G}$ = 0.90 with a min. value of 0.65 and a max. value of 1.25

$\frac{I_R}{I_B}$ = 1.00 with a min. value of 0.75 and a max. value of 1.35

In calculations, for the worst case the values I_R/I_G = 1.25 and I_R/I_B = 1.35 should be used if the compromise white point is chosen (x = 0.281 y = 0.311). If the white point C is chosen for reproduction of colours then for the worst case the current ratio values, I_R/I_G = 2.00 and I_R/I_B = 2.25 should be used.

5. Raster shape correction

It appears that for 90° deflection the combination of picture tube and deflection coil can give good convergence and landing, but it is not practical to design the combination such that a perfectly rectangular raster is obtained. To avoid the pin cushion raster which results it is necessary to provide raster correction electrically by modulating the deflecting current.

6. Adjustment procedures

The following procedures are suggested to ensure good landing, optimum convergence of the three beams over the entire area of the screen and good grey scale tracking.

Exact focusing is the final operation in the sequence of adjustments, see 6.3. When starting the sequence it is sufficient to adjust the convergence test pattern for optimum sharpness.

Prior to the adjustment procedure the picture tube has to be degaussed. This treatment will correct for localized areas of colour impurity resulting from any magnetization of the shield and internal tube parts and minimize the effect of the earth's magnetic field. Degaussing can be obtained by a coil that consists of 800 turns of 0.7 mm dia. enamelled copper wire (for 220 V_{rms}) and has an outer diameter of approx. 300 mm.
The coil should be moved such that the entire screen is subjected to its field. After about 10 seconds, the coil is moved away from the face plate to a distance of at least 2 m and disconnected from the A.C. power supply.

APPLICATION NOTES (continued)

During manufacture the receiver chassis should be degaussed in a similar manner, with the receiver switched on and care should be taken that the assembly line is properly degaussed. An automatic degaussing system built into the receiver serves for degaussing during normal operation.
It is recommended that the receiver has some adjustments made before the picture tube is built in. These adjustments should include EHT and deflection, and the dynamic convergence in order to facilitate the adjustment of purity and static convergence. Before deflection power and high voltage are applied to the tube, the bias control should be adjusted for maximum bias. After deflection power and high voltage are applied, the beam currents should be increased gradually to minimize the possibility of tube damage in the event of circuit faults. With the application of a test signal, initial adjustment of focus, raster size, linearity and centring should be made.

6.1 Colour purity and convergence procedures

The normal sequence involves, first, static convergence adjustment next the purifying magnet and adjustment of the axial position of the deflection coil, and lastly final adjustment of dynamic convergence.

6.1.1 Static convergence adjustment

A crosshatch pattern is the most suitable signal for convergence adjustments. The pattern should be displayed at moderate brightness to improve the accuracy. It is advisable to converge red and green first, with the blue gun cut off, and then to converge blue into the yellow pattern formed by the coinciding of red and green lines.
The red and green beams are made to converge statically by adjusting the permanent magnets of the radial convergence assembly, or the corresponding D.C. currents. Correct convergence is obtained when the lines in the centre converge to give yellow.
Before the blue lateral convergence magnet is used, the blue lines are brought horizontally adjacent to the yellow lines by means of the radial blue static convergence adjustment (permanent magnet or D.C. current).
Hereafter the blue lines are made to converge with the yellow lines in the centre with the aid of the blue lateral convergence magnet, resulting in white lines in the centre. If necessary this procedure is repeated.

6.1.2 Adjustment for colour purity

Adjustment for colour purity involves two steps:
Adjustment of the purifying magnets. (6.1.2.1)
Adjustment of the position of the deflection coil. (6.1.2.2)
To obtain optimum adjustment, the static and dynamic convergence should be adjusted previously and the picture tube degaussed and well warmed up to normal operating temperature (approx. 30 min, total beam current 600 μA).
Purity assessments are best made on a plain raster.

APPLICATION NOTES (continued)

Adjustment of the purifying magnets influences purity all over the screen. The deflection coil adjustment influences purity mainly at the screen edges. Therefore, the magnets have to be adjusted before the coil.

6.1.2.1 The purifying magnets are adjusted, judging by the landing in the screen centre. There are two ways of doing this.

The first method makes use of a microscope (magnification about 50x). With this method, the deflection coil need not possess more axial adjustment margin than that needed to cope with the spreads of the deflection centres. (12 mm total).

With the microscope, the position of the spot trio's is compared with the position of the phosphor dot trio's at the screen centre. To do this, the three colour rasters are displayed simultaneously, and the phosphor dots are illuminated by means of a light source, shining onto the screen at a small angle. The spot trio's should be made to land on the phosphor dot trio's as shown in Fig.1, with their centre points coinciding.

Due to the beam grouping used in this tube (which improves the overall landing) the spots will then be approx. 25 μm eccentric with respect to their corresponding phosphor dots.

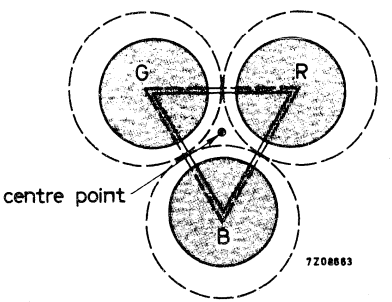

Fig.1. Correct landing in the screen centre.

The second method ("Red ball" method) is applicable if the mounting of the deflection coil is such that it can be drawn away approx. 20 mm backwards from its foremost position when it touches the funnel.

The coil is moved backwards as far as possible, and only the red raster is turned on. (The red gun needs relatively the highest current, thus mislanding on blue and green phosphor dots is seen more clearly so that a sharp indication is obtained).

Now a red area of approx. 10 cm diameter is visible on the screen, surrounded by discoloured and blue and green areas. With the aid of the purifying magnets, the red area is positioned near the screen centre. In order that the above mentioned beam grouping shows to full adventage, the red area should be positioned 20 mm down to the left of the screen centre, see Fig.2.

APPLICATION NOTES (continued)

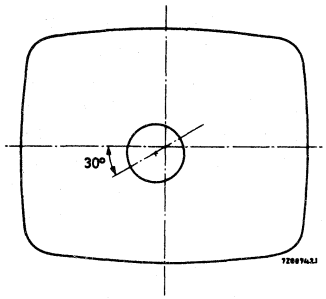

Fig.2

6.1.2.2 After adjustment of the purifying magnets, the deflection coil is adjusted by shifting it axially until optimum landing over the entire screen is reached. This can be done in two stages:

1. Only the red raster turned on, and the coil position giving an overall pure red raster sought.
2. For the final adjustment, a white raster is displayed and, if necessary, very slight adjustment of the deflection coil position made to obtain the best white uniformity.

After having completed 1 and 2, the red, green and blue rasters are checked separately for their purity, and if necessary the procedure repeated.

6.1.3 Adjustment of dynamic convergence

Just as for the static convergence a crosshatch pattern is recommended, displayed at low brightness.
It is advisable to adjust first the convergence in the vertical direction (with frame frequency) and then the horizontal convergence (with currents of line frequency). During the dynamic convergence adjustments, the static convergence (6.1.1) may need readjustment depending on the efficiency of any clamping circuits used.

A favourable sequence is to adjust the red and green convergence controls first so that both rasters coincide to display yellow lines while the blue gun is kept cut-off. Thereafter the blue pattern is added and adjusted to coincide with the yellow to give a white pattern. However, as the blue horizontal convergence system usually has a significant power consumption which influences the line time base to some degree, it is often advisable to start the whole convergence procedure by adjusting the blue horizontal convergence controls coarsely to give a straight blue horizontal centre line.

During the vertical dynamic convergence adjustment, the vertical axis of the screen should be taken as reference, while the horizontal adjustments should be referred to the horizontal axis. During the latter sequence the lateral blue dynamic convergence is also adjusted.

APPLICATION NOTES (continued)

The currents for dynamic convergence (except blue lateral) consist of two components, viz. one of parabolic and one of sawtooth wave form. Usually both have their own controls which have to be adjusted in combination to obtain convergence. The parabolic ("amplitude") controls are used to make the configurations at the extremities of the picture axis equal to that at the centre. With the sawtooth ("phase" or "tilt") control the two extremities of the picture axis are made equal to each other as far as possible.
In addition, the blue horizontal convergence needs an extra waveform correction to correct for the tilting of the outer edges.
The blue lateral waveform needed is basically a sawtooth. Left-to-right asymmetry can be adjusted by slight rotation of the radial convergence assembly.

By repeated adjustments of the controls the line patterns in the various colours ultimately coincide and become parallel to each other. Thereafter these are made to coincide with the aid of the static convergence magnets to white lines.

After convergence onto the axes is obtained, usually some errors in the corners of the picture remain. Slight readjustment may be needed to minimize these errors.

At the end of the procedure purity is checked, and readjusted if needed, with the aid of the purifying magnets.

6.2 Adjustment of grey scale

This adjustment is carried out last of all and the sequence of the manipulations depends on receiver circuitry.

To obtain a constant hue of white over the whole grey scale when displaying a monochrome signal, the three guns must track accurately. This can be achieved by adjusting two points of each gun characteristic, one near cut-off and one near the highlights. To this end the following variables are available, and in a receiver two of them must be made adjustable for each gun:
1. cut-off point (V_{g_1})
2. slope (V_{g_2})
3. drive

The proper adjustment procedure depends on receiver circuitry. After adjustment, the brightness and contrast controls should not cause any change in hue, and the chosen white point should be displayed.

6.3 Focusing

The focusing voltage for all three guns can be adjusted via the common focus base pin No.9. In order to obtain optimum focus it is recommended to use a black-and-white picture with a low peak to mean brightness ratio, such as the RMA test picture, running at a total mean current of about 1 mA (peak currents in the three guns in the order of 2.5 mA), and to focus at the highlights. This procedure will give best overall focus.

Brightness at the centre of the screen as a function of I_{total} for white CIE coordinates
x = 0.310, y = 0.316 3)

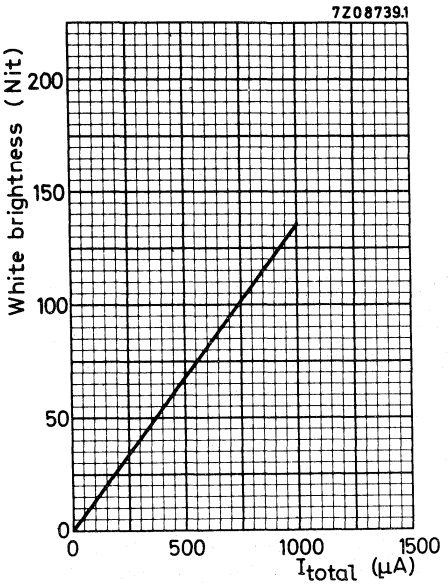

Brightness at the centre of the screen as a function of I_{total} for white CIE coordinates
x = 0.265, y = 0.290. 4)

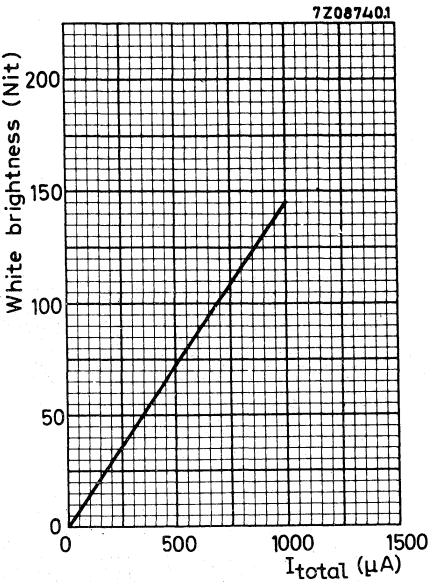

Brightness at the centre of the screen as a function of I_{total} for white CIE coordinates
x = 0.281, y = 0.311 5)

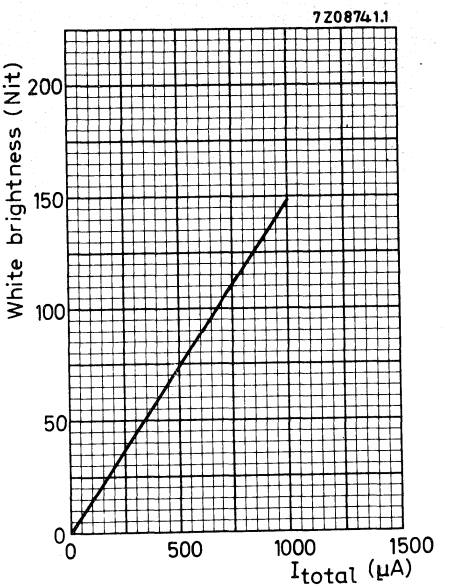

Scanned area 447 mm x 337 mm

3)4)5) See page 8.

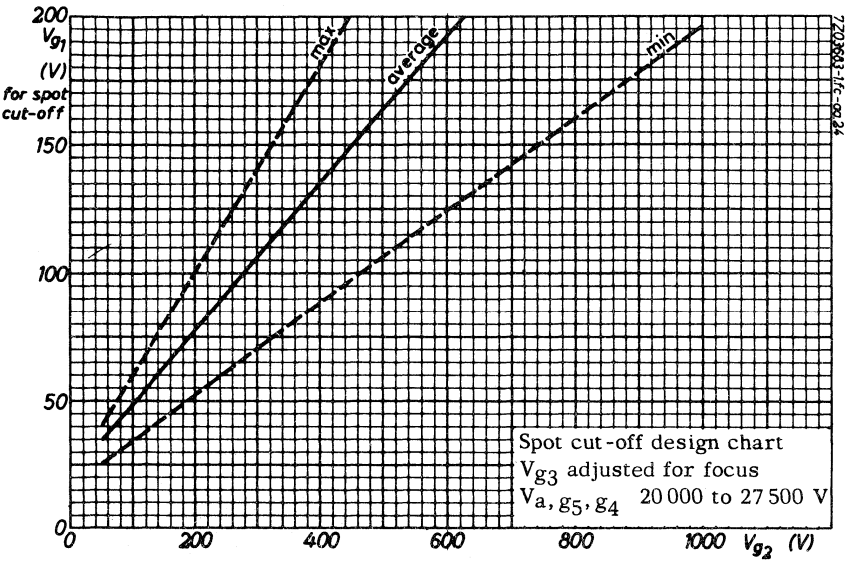
200
V_{g_1} (V) for spot cut-off
150
100
50
0
0
200
400
600
800
1000 V_{g_2} (V)
max.
average
min.
Spot cut-off design chart
V_{g_3} adjusted for focus
V_a, g_5, g_4 20 000 to 27 500 V
2200683-1fc-ge24

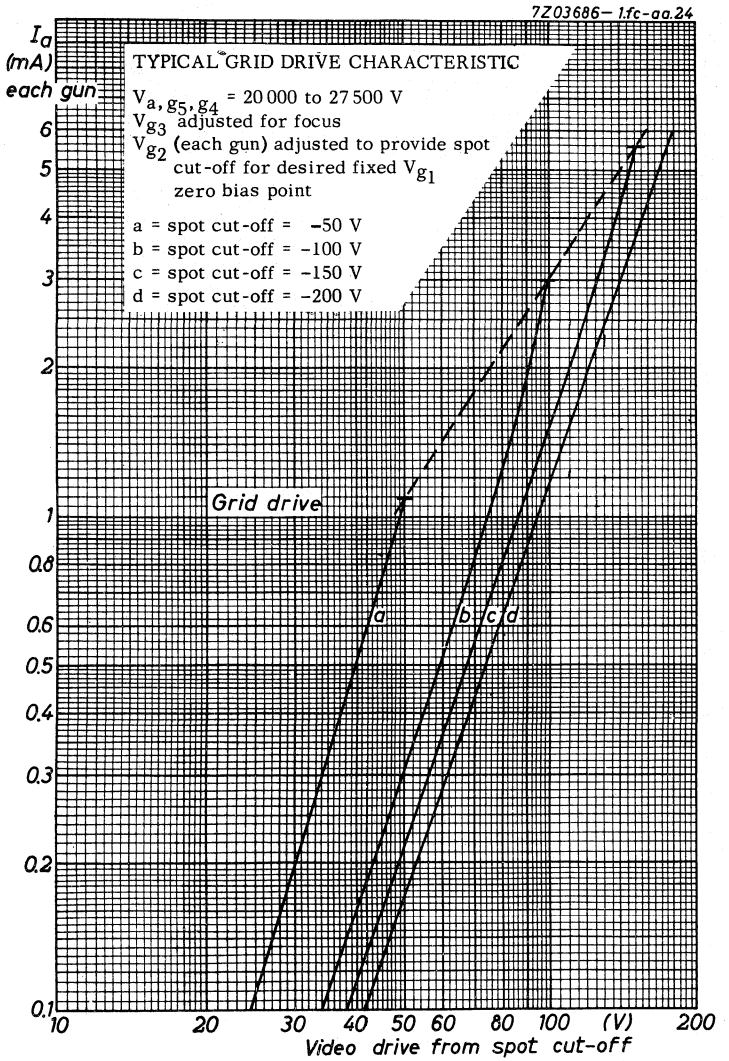
7Z03686-1fc-aa.24
I_a (mA) each gun
TYPICAL GRID DRIVE CHARACTERISTIC
V_{a,g_5,g_4} = 20 000 to 27 500 V
V_{g_3} adjusted for focus
V_{g_2} (each gun) adjusted to provide spot cut-off for desired fixed V_{g_1} zero bias point
a = spot cut-off = −50 V
b = spot cut-off = −100 V
c = spot cut-off = −150 V
d = spot cut-off = −200 V
Grid drive
a
b c d
6
5
4
3
2
1
0.8
0.6
0.5
0.4
0.3
0.2
0.1
10
20
30
40
50
60
80
100
(V)
200
Video drive from spot cut-off

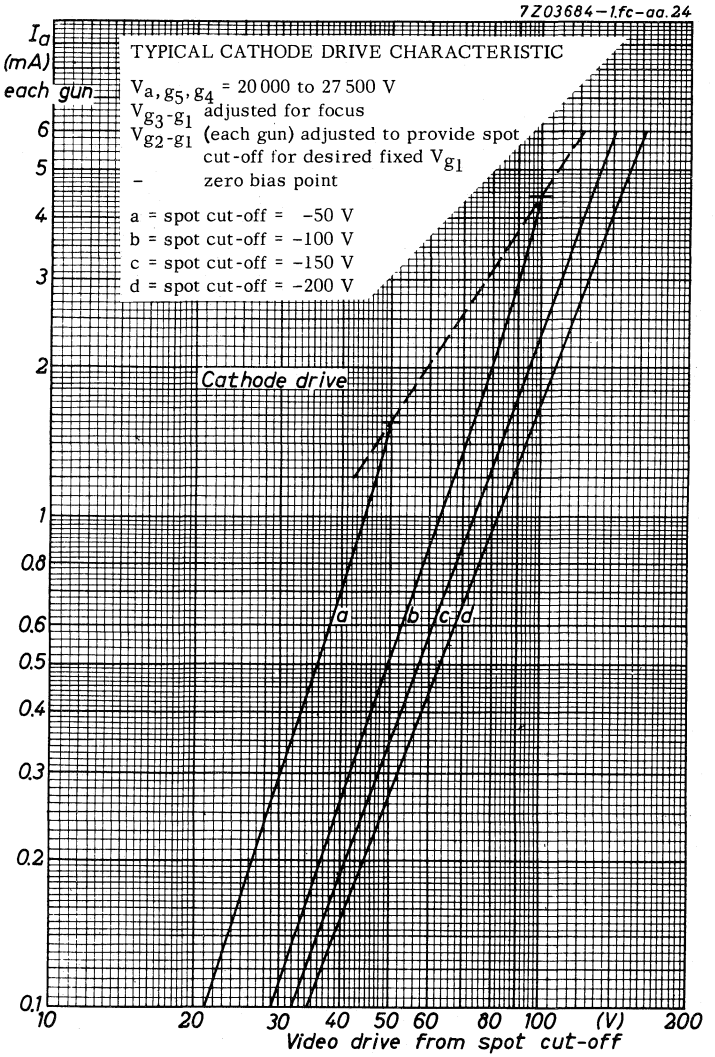
7Z03684-1.fc-aa.24
TYPICAL CATHODE DRIVE CHARACTERISTIC
V_a, g_5, g_4 = 20 000 to 27 500 V
$V_{g_3-g_1}$ adjusted for focus
$V_{g_2-g_1}$ (each gun) adjusted to provide spot cut-off for desired fixed V_{g_1}
– zero bias point
a = spot cut-off = −50 V
b = spot cut-off = −100 V
c = spot cut-off = −150 V
d = spot cut-off = −200 V
Cathode drive
I_a (mA) each gun
6
5
4
3
2
1
0.8
0.6
0.5
0.4
0.3
0.2
0.1
a
b
c
d
10
20
30
40
50
60
80
100
(V)
200
Video drive from spot cut-off

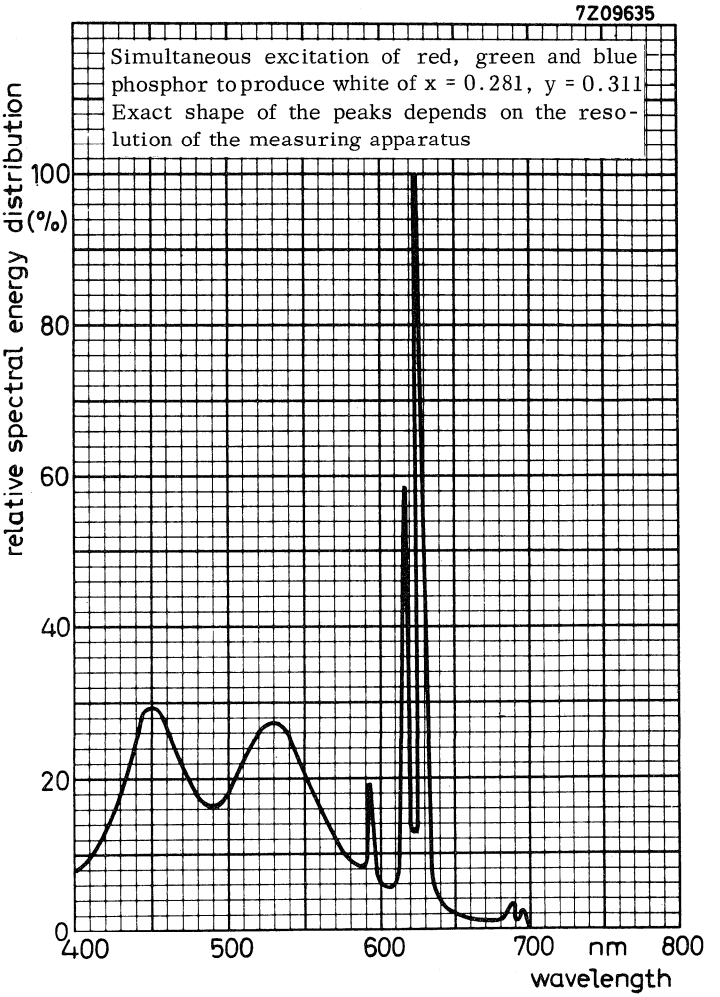

Colour coordinates

	x	y
red	0.630	0.340
green	0.315	0.600
blue	0.150	0.060

T.V. PICTURE TUBE

59 cm (23 inch), 110°, rectangular direct vision picture tube for black- and white T.V. with integral protection.

QUICK REFERENCE DATA		
Face diagonal	59	cm (23 inch)
Deflection angle	110°	
Overall length	359	mm
Neck diameter	28.6	mm
Light transmission of face glass	45	%
Focusing		electrostatic
Bulb		reinforced
Heating	6.3 V, 300	mA

SCREEN

Metal backed phosphor			
Luminescence	white		
Light transmission of face glass		45	%
Useful diagonal	min.	566	mm
Useful width	min.	489	mm
Useful height	min.	385	mm

HEATING

Indirect by A.C. or D.C.; series or parallel supply

Heater current	I_f	300	mA
Heater voltage	V_f	6.3	V

If the tube is connected in a series heater chain the surge heater voltage must not exceed 9.5 V_{rms} when the supply is switched on.

MECHANICAL DATA

Dimensions in mm

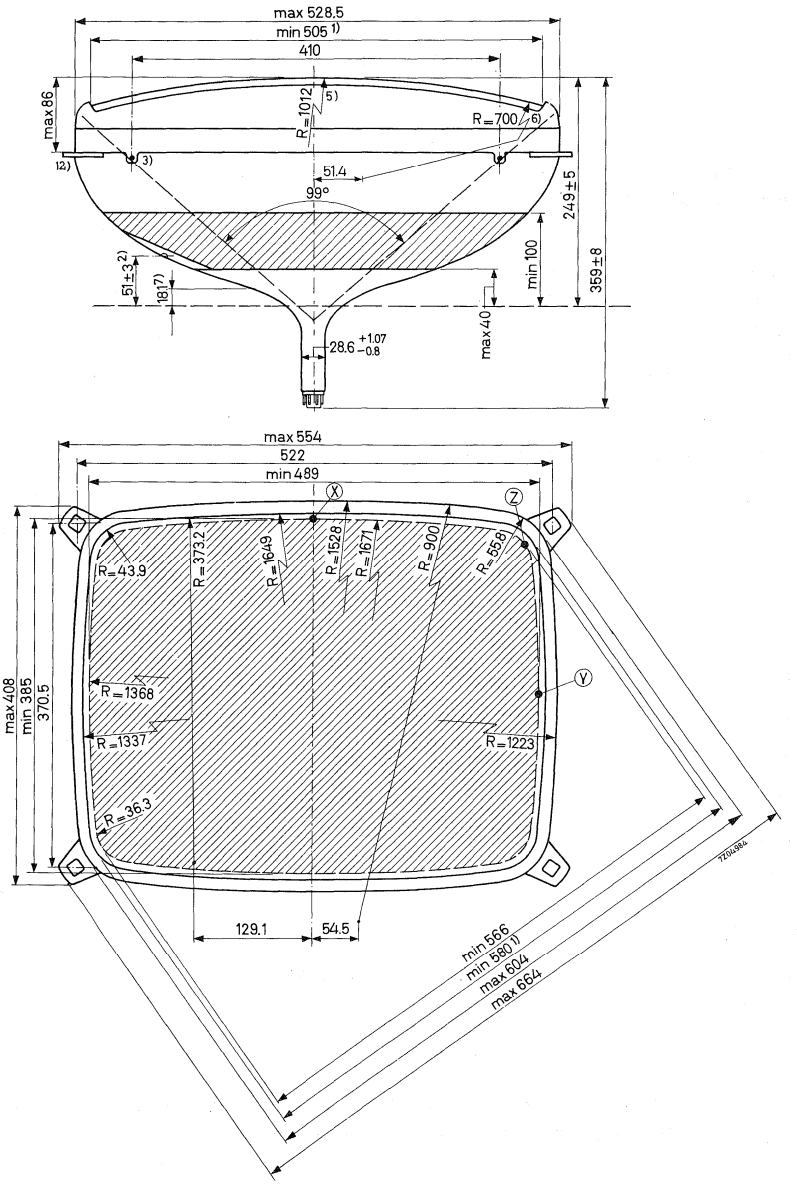

MECHANICAL DATA (continued)

Dimensions in mm

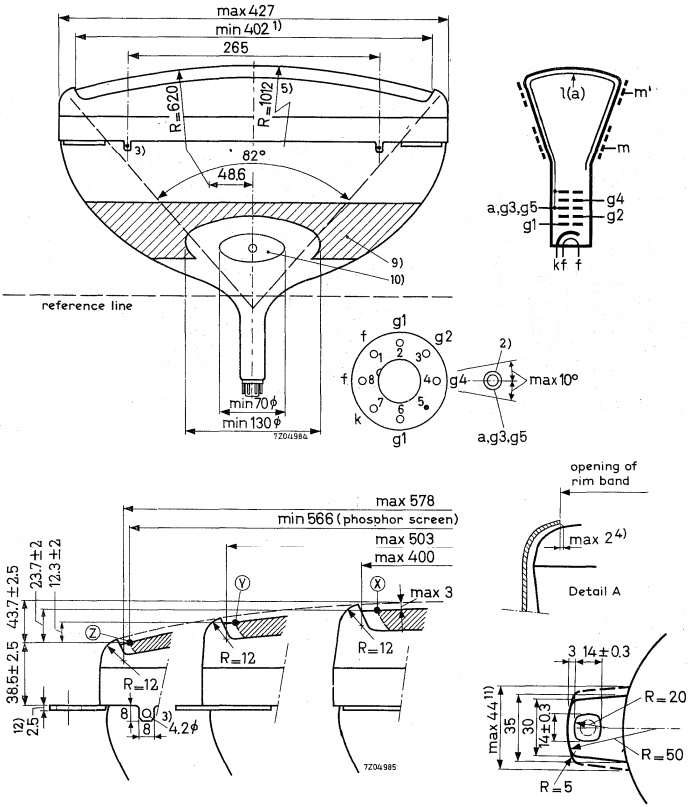

Mounting position: any

Base : neo eightar 7 pin JEDEC B7-208, B8H ,IEC 67-I-3ia

Net weight : approx. 13 kg

The bottom circumference of the base wafer will fall within a circle concentric with the tube axis and having a diameter of 40 mm.
The socket for the base should not be rigidly mounted; it should have flexible leads and be allowed to move freely.

For notes see page 5.

MAXIMUM CONE CONTOUR DRAWING

Dimensions in mm

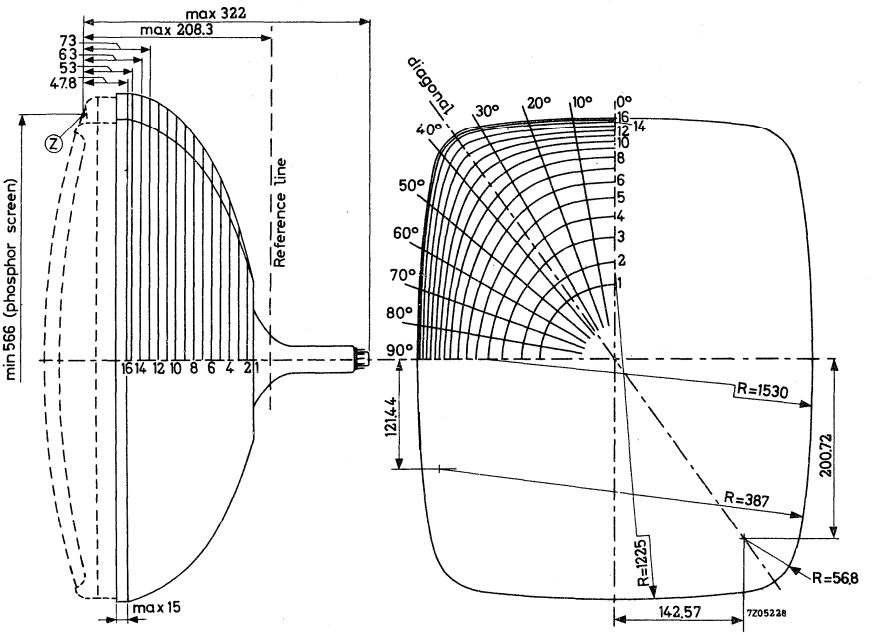

Section	Nom. distance from point "Z"	Distance from centre (max. values)										
		0° Long	10°	20°	30°	35° 23' Diagonal	40°	50°	60°	70°	80°	90° Short
1	190	77.5	77.5	77.5	77.5	77.5	77.5	77.5	77.5	77.5	77.5	77.5
2	183	101.2	101.2	101.2	101.2	101.2	101.2	101.2	101.2	101.2	101.2	101.2
3	173	130.3	131.0	131.1	129.6	127.9	126.3	123.5	121.8	121.1	120.7	121.1
4	163	154.5	155.0	155.8	152.0	149.1	146.6	142.1	138.6	136.8	136.4	136.8
5	153	175.0	175.7	176.1	172.9	168.8	165.6	159.3	154.2	151.0	149.7	149.8
6	143	192.7	193.7	194.3	191.9	187.2	183.1	175.4	168.7	164.4	161.5	161.0
7	133	207.9	209.4	210.9	209.0	204.1	199.3	190.2	181.8	176.2	171.9	170.5
8	123	221.0	222.8	225.4	224.6	220.3	215.0	203.9	193.8	186.5	181.2	178.8
9	113	231.8	233.8	238.1	239.2	235.7	230.3	216.5	204.4	195.7	189.5	186.9
10	103	241.5	243.6	248.7	252.6	250.3	244.7	228.3	214.4	203.7	196.8	194.1
11	93	249.6	252.0	258.5	264.4	263.9	258.2	239.1	223.2	211.0	203.3	200.9
12	83	255.9	258.7	266.2	274.9	276.3	271.0	249.0	230.6	217.1	208.8	206.5
13	73	260.7	263.7	272.3	284.4	287.6	282.8	257.7	236.3	221.7	213.2	210.7
14	63	264.0	267.1	276.6	292.0	297.2	292.7	264.4	240.3	224.8	216.3	213.7
15	53	265.9	269.1	279.0	296.2	302.3	297.7	267.7	242.8	226.7	218.0	215.2
16	47.8	266.25	269.45	279.37	297.01	303.0	298.64	268.44	243.25	227.23	218.35	215.5

NOTES TO OUTLINE DRAWING

1. Opening of the metal rim band (see detail A). Eccentricity with respect to centre of screen max. 1.5 mm.
2. Small cavity contact.
3. 8 tags for earthing the rim band. The metal rim band must be earthed by means of these tags. No electrical contact between the band and the mounting lugs can be guaranteed.
4. Meniscus of resin filler on screen.
5. The screen radius of 1012 mm applies to the centre area of the screen.
6. The screen radius of 700 mm applies to the major axis and the diagonal.
7. End of free zone. The maximum contour from reference line towards screen is given by the reference line gauge C (18.13 mm).
8. Cancelled.
9. The configuration of the external conductive coating is optional but contains the contact area as shown in the drawing.
   The external conductive coating must be earthed.
10. This area must be kept clean.
11. Minimum space to be reserved for mounting lugs.
    The mounting screws in the cabinet must be situated inside a circle of 9.5 mm diameter drawn around the true geometrical position i.e. corners of a rectangle of 522 x 370.5 mm.
12. The deviation of any lug with respect to the plane through the other three lugs is max. 2 mm.

CAPACITANCES

Final accelerator to external conductive coating	$C_{a,g_3,g_5/m}$	< 2500 > 1700	pF pF
Final accelerator to metal band	$C_{a,g_3,g_5/m'}$	350	pF
Cathode to all	C_k	4	pF
Grid No.1 to all	C_{g_1}	6	pF

FOCUSING electrostatic

DEFLECTION magnetic

Diagonal deflection angle	110°
Horizontal deflection angle	99°
Vertical deflection angle	82°

PICTURE CENTRING MAGNET

Field intensity perpendicular to the tube axis adjustable from 0 to 800 A/m (0 to 10 Oerstedt).
Maximum distance between centre of field of this magnet and reference line: 57 mm.

TYPICAL OPERATING CONDITIONS

Grid drive service

Final accelerator voltage	V_{a,g_3,g_5}	20	kV
Focusing electrode voltage	V_{g_4}	0 to 400	V [1]
Grid No.2 voltage	V_{g_2}	400	V
Grid No.1 voltage for visual extinction of focused raster	V_{g_1}	-40 to -77	V

Cathode drive service

Voltages are specified with respect to grid No.1

Final accelerator voltage	V_{a,g_3,g_5}	20	kV
Focusing electrode voltage	V_{g_4}	0 to 400	V [1]
Grid No.2 voltage	V_{g_2}	400	V
Cathode voltage for visual extinction of focused raster	V_k	36 to 66	V

[1]) Voltage range to obtain optimum overall focus at 100 μA beam current.

LIMITING VALUES (Design centre rating system, unless otherwise stated)

Final accelerator voltage at $I_a, g_3, g_5 = 0$	V_a, g_3, g_5	max. min.	20 11	kV kV	[1]
Grid No.4 voltage,					
positive	V_{g_4}	max.	1000	V	
positive peak	$V_{g_{4p}}$	max.	2500	V	[2]
negative	$-V_{g_4}$	max.	500	V	
Grid No.2 voltage	V_{g_2}	max. min.	700 350	V V	[3]
Grid No.2 to grid No.1 voltage	V_{g_2}/V_{g_1}	max.	850	V	
Grid No.1 voltage,					
positive	V_{g_1}	max.	0	V	
positive peak	$V_{g_{1p}}$	max.	2	V	
negative	$-V_{g_1}$	max.	150	V	
negative peak	$-V_{g_{1p}}$	max.	400	V	[2]
Cathode to grid No.1 voltage,					
positive	V_{k/g_1}	max.	150	V	
positive peak	$V_{k/g_{1p}}$	max.	400	V	[2]
negative	$-V_{k/g_1}$	max.	0	V	
negative peak	$-V_{k/g_{1p}}$	max.	2	V	
Cathode to heater voltage,					
positive	$V_{k/f}$	max.	150	V	
positive peak	V_{k/f_p}	max.	400	V	
negative	$-V_{k/f}$	max.	135	V	
negative peak	$-V_{k/f_p}$	max.	180	V	
positive during equipment warm-up period not exceeding 15 s	$V_{k/f}$	max.	410	V	[4]

[1] Absolute maximum rating system.

[2] Maximum pulse duration 22% of a cycle but maximum 1.5 ms.

[3] At $V_{g_1/k} = 0$ V.

[4] Between 15 s and 45 s after switching on a decrease in k/f voltage, linear proportional with time, from 410 V to 250 V is permissible.

CIRCUIT DESIGN VALUES

Grid No.4 current,			
positive	I_{g_4}	max. 25	μA
negative	$-I_{g_4}$	max. 25	μA
Grid No.2 current,			
positive	I_{g_2}	max. 5	μA
negative	$-I_{g_2}$	max. 5	μA

MAXIMUM CIRCUIT VALUES

Resistance between cathode and heater	$R_{k/f}$	max. 1.0	MΩ
Impedance between cathode and heater	$Z_{k/f}$ (50 Hz)	max. 0.1	MΩ
Grid No.1 circuit resistance	R_{g_1}	max. 1.5	MΩ
Grid No.1 circuit impedance	Z_{g_1} (50 Hz)	max. 0.5	MΩ
Resistance between external conductive coating and rimband	$R_{m/m'}$	min. 2	MΩ

T.V. PICTURE TUBE

59 cm (23 inch), 110°, rectangular direct vision picture tube for black- and white T.V.

QUICK REFERENCE DATA		
Face diagonal	59	cm (23 inch)
Deflection angle	110°	
Overall length	358	mm
Neck diameter	28.6	mm
Light transmission of face glass	45	%
Focusing		electrostatic
Bulb		mono-panel
Heating	6.3 V, 300	mA

SCREEN

Metal backed phosphor			
Luminescence	white		
Light transmission of face glass		45	%
Useful diagonal	min.	566	mm
Useful width	min.	489	mm
Useful height	min.	385	mm

HEATING

Indirect by A.C. or D.C.; series or parallel supply

Heater current	I_f	300	mA
Heater voltage	V_f	6.3	V

If the tube is connected in a series heater chain the surge heater voltage must not exceed 9.5 V_{rms} when the supply is switched on.

MECHANICAL DATA

Dimensions in mm

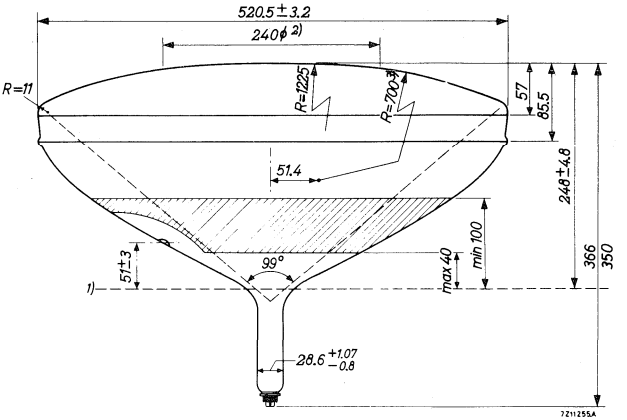

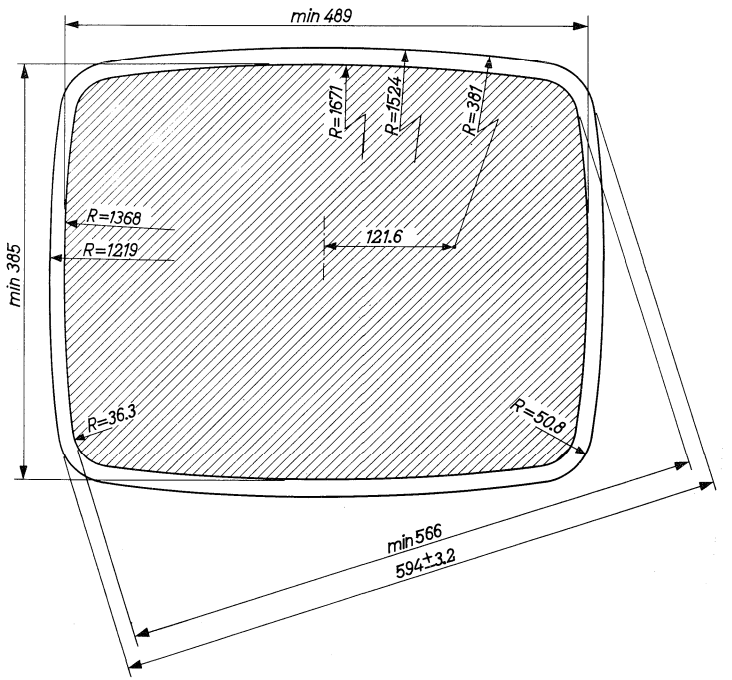

MECHANICAL DATA Dimensions in mm

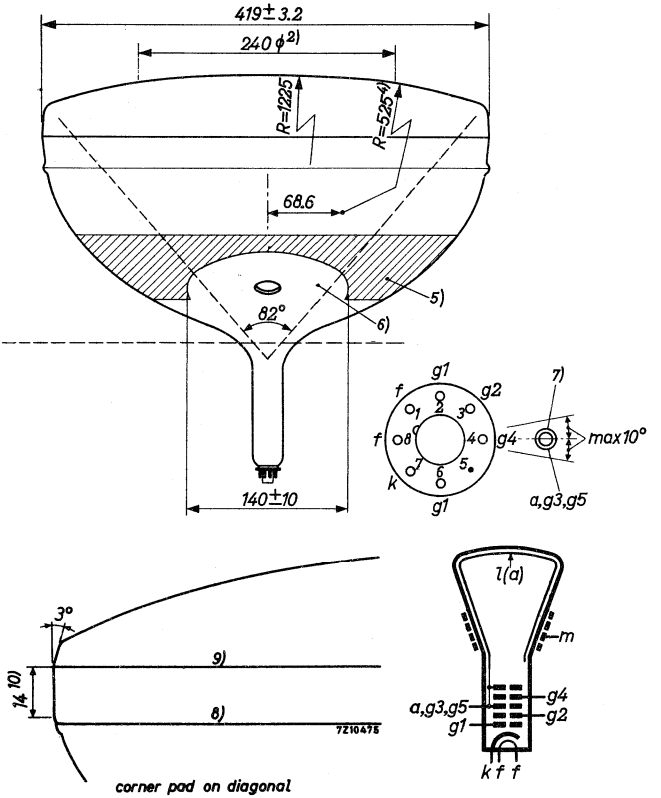

Mounting position: any

Base : Neo-eightar 7 pin, Jedec B7-208, B8H

Net weight : approx. 12 kg

The bottom circumference of the base wafer will fall within a circle concentric with the tube axis and having a diameter of 40 mm.
The socket for the base should not be rigidly mounted; it should have flexible leads and be allowed to move freely.

For notes see page 5

MAXIMUM CONE CONTOUR DRAWING

Dimensions in mm

All values are given as nominal unless otherwise indicated.

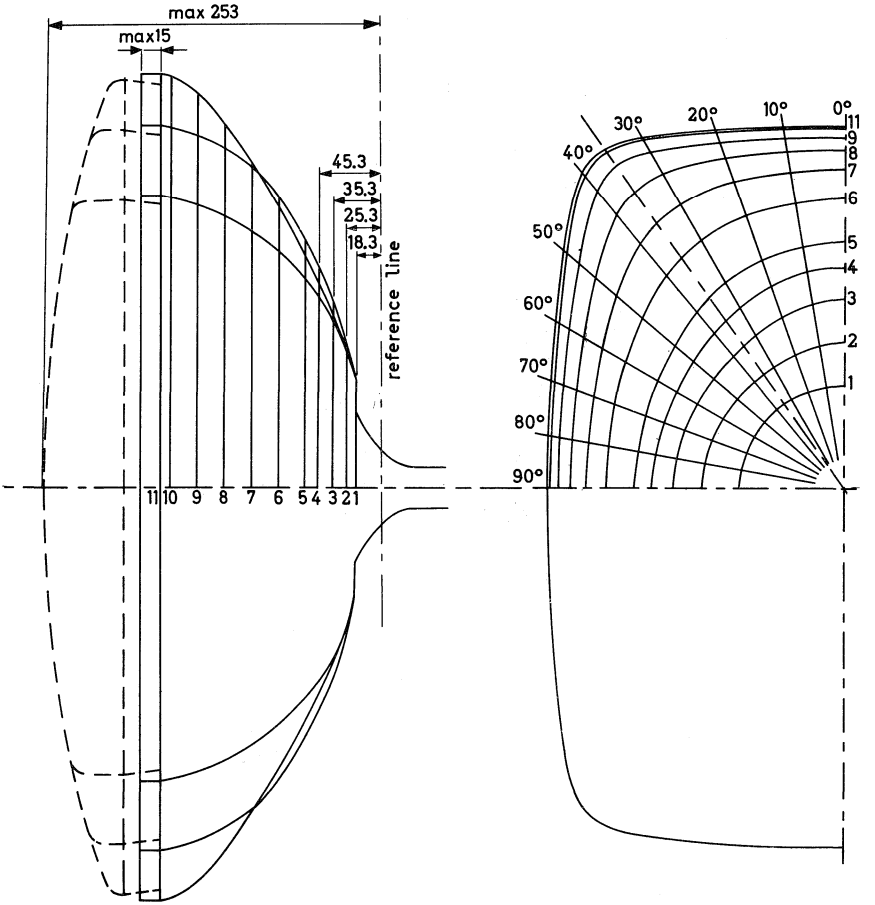

Section	Nom. distance from ref. line	Distance from centre (max. values)										
		Long 0°	10°	20°	30°	Diag.	40°	50°	60°	70°	80°	Short 90°
1	18.3	75.0	75.0	75.0	75.0	75.0	75.0	75.0	75.0	75.0	75.0	75.0
2	25.3	106.5	106.0	104.4	102.4	101.6	101.0	101.0	101.0	101.0	101.0	101.0
3	35.3	137.7	136.0	132.0	128.6	126.4	125.3	123.2	122.1	121.8	121.6	122.5
4	45.3	160.8	160.0	155.9	151.2	148.6	146.7	142.6	140.0	138.5	138.5	138.8
5	55.3	180.0	179.0	176.5	172.2	168.5	165.8	159.8	155.3	152.8	152.0	151.6
6	75.3	211.8	211.0	210.9	208.3	204.3	200.2	190.7	182.5	176.4	172.8	172.0
7	95.3	233.8	234.6	237.8	238.5	235.7	230.9	215.9	202.2	193.1	188.0	187.0
8	115.3	247.0	249.0	255.6	263.3	263.6	258.3	236.2	218.0	206.2	199.7	198.0
9	135.3	256.5	259.0	267.8	282.1	287.0	280.4	252.0	230.1	216.0	208.5	206.5
10	155.3	263.0	266.0	275.1	292.5	299.2	294.8	263.6	239.0	223.2	214.8	212.2
11	162.5	264.2	267.5	277.0	294.2	301.5	298.0	266.2	241.2	225.2	216.2	213.5

NOTES TO OUTLINE DRAWING

1. Reference line, determined by the plane of the upper edge of the flange of the reference line gauge when the gauge is resting on the cone. Reference line gauge C.
2. Outer radius of 1225 mm applies to this area.
3. This outer radius applies to the diagonals and the major axis and to the area in between.
4. This outer radius applies to the minor axis and increases steadily to 700 mm on the diagonals.
5. The external conductive coating must be earthed. The configuration of the outer coating is optional, but contains the contact area as shown.
6. This area must be kept clean.
7. Small cavity contact.
8. At any point around the splice-line seal the bulge at this seal will not protrude more than 1.6 mm beyond the tube circumference at the mould-match line.
9. Mould-match line (= reference line for measuring the maximum dimensions).
10. Minimum undisturbed area between mould-match line and splice line available for mounting a tube support band. No excessive pressure should be exerted by the support band on the splice line seal.

CAPACITANCES

Final accelerator to external conductive coating	$C_{a,g_3,g_5/m}$	< 2500 > 1700	pF pF
Cathode to all	C_k	4	pF
Grid No.1 to all	C_{g_1}	6	pF

FOCUSING electrostatic

DEFLECTION magnetic

Diagonal deflection angle	110°
Horizontal deflection angle	99°
Vertical deflection angle	82°

PICTURE CENTRING MAGNET

Field intensity perpendicular to the tube axis adjustable from 0 to 800 A/m (0 to 10 Oerstedt).
Maximum distance between centre of field of this magnet and reference line: 57 mm.

TYPICAL OPERATING CONDITIONS

Grid drive service

Final accelerator voltage	V_{a,g_3,g_5}	18	kV
Focusing electrode voltage	V_{g_4}	0 to 400	V [1]
Grid No.2 voltage	V_{g_2}	400	V
Grid No.1 voltage for visual extinction of focused raster	V_{g_1}	-40 to -77	V

Cathode drive service

Voltages are specified with respect to grid No.1

Final accelerator voltage	V_{a,g_3,g_5}	18	kV
Focusing electrode voltage	V_{g_4}	0 to 400	V [1]
Grid No.2 voltage	V_{g_2}	400	V
Cathode voltage for visual extinction of focused raster	V_k	36 to 66	V

1) Voltage range to obtain optimum overall focus at 100 μA beam current.

LIMITING VALUES (Design centre rating system, unless otherwise stated)

Final accelerator voltage at $I_a, g_3, g_5 = 0$	V_{a, g_3, g_5}	max.	18	kV
		min.	13	kV
Grid No.4 voltage,				
positive	V_{g_4}	max.	1000	V
positive peak	$V_{g_{4p}}$	max.	2500	V [1]
negative	$-V_{g_4}$	max.	500	V
Grid No.2 voltage	V_{g_2}	max.	700	V [2]
		min.	350	V
Grid No.1 voltage,				
positive	V_{g_1}	max.	0	V
positive peak	$V_{g_{1p}}$	max.	2	V
negative	$-V_{g_1}$	max.	150	V
negative peak	$-V_{g_{1p}}$	max.	400	V [1]
Cathode to grid No.1 voltage,				
positive	V_{k/g_1}	max.	150	V
positive peak	$V_{k/g_{1p}}$	max.	400	V [1]
negative	$-V_{k/g_1}$	max.	0	V
negative peak	$-V_{k/g_{1p}}$	max.	2	V
Cathode to heater voltage,				
positive	$V_{k/f}$	max.	200	V
positive peak	V_{k/f_p}	max.	300	V
negative	$-V_{k/f}$	max.	125	V
negative peak	$-V_{k/f_p}$	max.	250	V
positive during equipment warm-up period not exceeding 45 s	$V_{k/f}$	max.	410	V

1) Maximum pulse duration 22% of a cycle but maximum 1.5 ms

2) At $V_{g_1/k} = 0$ V

CIRCUIT DESIGN VALUES

Grid No.4 current,			
positive	I_{g_4}	max. 25	μA
negative	$-I_{g_4}$	max. 25	μA
Grid No.2 current			
positive	I_{g_2}	max. 5	μA
negative	$-I_{g_2}$	max. 5	μA

MAXIMUM CIRCUIT VALUES

Resistance between cathode and heater	$R_{k/f}$	max. 1	MΩ
Impedance between cathode and heater	$Z_{k/f}$ (50 Hz)	max. 0.1	MΩ
Grid No.1 circuit resistance	R_{g_1}	max. 1.5	MΩ
Grid No.1 circuit impedance	Z_{g_1} (50 Hz)	max. 0.5	MΩ

T.V. PICTURE TUBE

59 cm (23 inch), 110°, rectangular direct vision picture tube for black- and white T.V.

QUICK REFERENCE DATA	
Face diagonal	59 cm (23 inch)
Deflection angle	110°
Overall length	365.5 mm
Neck diameter	28.6 mm
Light transmission of face glass	45 %
Focusing	electrostatic
Bulb	twin-panel
Heating	6.3 V, 300 mA

SCREEN

Metal backed phosphor		
Luminescence	white	
Light transmission of face glass	45	%
Useful diagonal	min. 566.5	mm
Useful width	min. 490.5	mm
Useful height	min. 387.5	mm

HEATING

Indirect by A.C. or D.C.; series or parallel supply

Heater current	I_f	300	mA
Heater voltage	V_f	6.3	V

If the tube is connected in a series heater chain the surge heater voltage must not exceed 9.5 V_{rms} when the supply is switched on.

This type is equivalent with type 23 DGP4A.

MECHANICAL DATA

Dimensions in mm

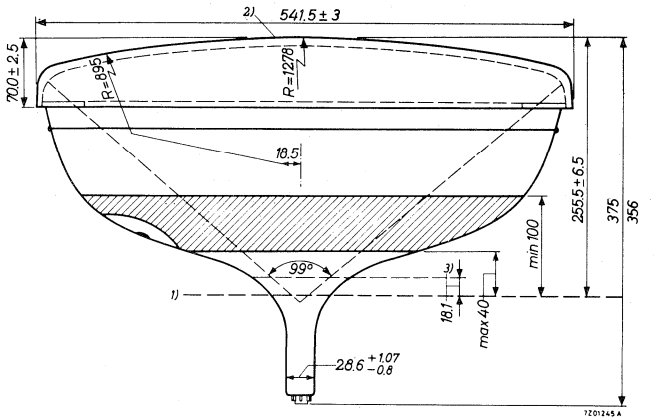

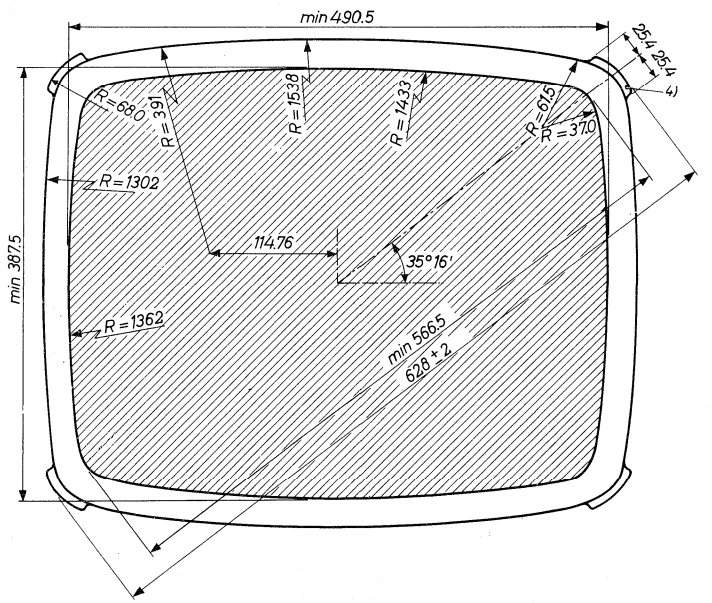

MECHANICAL DATA (continued) Dimensions in mm

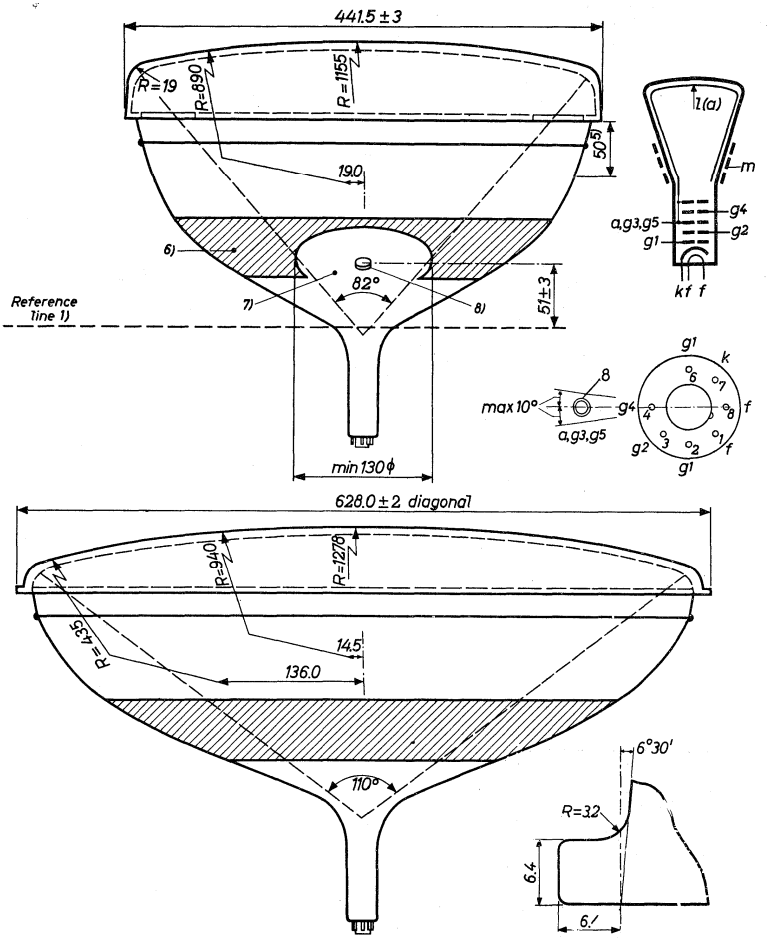

Mounting position: any

Base : neo eightar 7 pin JEDEC B7-208, B8H

Net weight : approx. 16 kg

The bottom circumference of the base wafer will fall within a circle concentric with the tube axis ans having a diameter of 40 mm.
The socket for the base should not be rigidly mounted; it should have flexible leads and be allowed to move freely.

For notes see page 5

MAXIMUM CONE CONTOUR DRAWING

Dimensions in mm

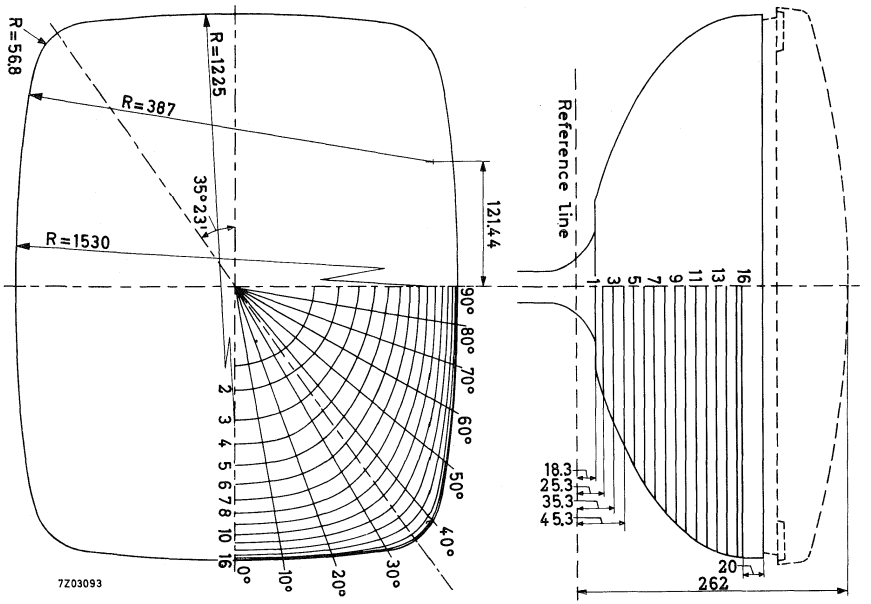

All dimensions (in mm) are maximum values, unless otherwise specified

Section	Nom. distance from ref. line	Long axis 0°	10°	20°	30°	Diagonal 35°23'	40°	50°	60°	70°	80°	Short axis 90°
1	18.3	77.5	77.5	77.5	77.5	77.5	77.5	77.5	77.5	77.5	77.5	77.5
2	25.3	101.2	101.2	101.2	101.2	101.2	101.2	101.2	101.2	101.2	101.2	101.2
3	35.3	130.4	131.0	131.1	129.6	127.9	126.3	123.5	121.8	121.1	120.7	121.1
4	45.3	154.5	155.0	155.8	152.0	149.1	146.6	142.1	138.6	136.8	136.4	136.8
5	55.3	175.0	175.7	176.1	172.9	168.8	165.6	159.3	154.2	151.0	149.7	149.8
6	65.3	192.7	193.7	194.3	191.9	187.2	183.1	175.4	168.7	164.4	161.5	161.0
7	75.3	207.9	209.4	210.9	209.0	204.1	199.3	190.2	181.8	176.2	171.9	170.5
8	85.3	221.0	222.8	225.4	224.6	220.3	215.0	203.9	193.8	186.5	181.2	178.8
9	95.3	231.8	233.8	238.1	238.2	235.7	230.3	216.5	204.4	195.7	189.5	186.9
10	105.3	241.5	243.6	248.7	252.6	250.3	244.7	228.3	214.4	203.7	196.8	194.1
11	115.3	249.6	252.0	258.5	264.4	263.9	258.2	239.1	223.2	211.0	203.3	200.9
12	125.3	255.9	258.7	266.2	274.8	276.3	271.0	249.0	230.5	217.1	208.8	205.5
13	135.3	260.7	263.7	272.3	284.4	287.6	282.8	257.7	236.3	221.7	213.2	210.7
14	145.3	264.0	267.1	276.6	292.0	297.2	292.7	264.4	240.3	224.8	216.3	213.7
15	155.3	265.9	269.1	279.0	296.2	302.3	297.7	267.7	242.8	226.7	218.0	215.2
16	160.5	266.25	269.45	279.37	297.01	303.00	298.64	268.44	243.25	227.23	218.35	215.50

CAPACITANCES

Final accelerator to external conductive coating	$C_{a,g_3,g_5/m}$	< 2500 pF > 1700 pF
Cathode to all	C_k	4 pF
Grid No.1 to all	C_{g_1}	6 pF

FOCUSING electrostatic

DEFLECTION magnetic

Diagonal deflection angle	110°
Horizontal deflection angle	99°
Vertical deflection angle	82°

PICTURE CENTRING MAGNET

Field intensity perpendicular to the tube axis adjustable from 0 to 800 A/m (0 to 10 Oerstedt).
Maximum distance between centre of field of this magnet and reference line: 57 mm.

NOTES TO OUTLINE DRAWING

1. Reference line. Reference line gauge C.
2. The centre of the panel may be eccentric with respect to the tube axis. The shift of the protective panel along its minor and major axes may be max. 1.5 mm.
3. Maximum contour given by reference line gauge.
4. The four lugs of the protective panel may be used for mounting the tube. However, the restrictions made under note 5) should be observed.
5. Care should be taken that no mounting parts are in direct contact with the tube envelope unless the support is spaced from the envelope by cushioning parts.
   No excessive pressure should be exerted by the support band on the splice line seal.
6. The configuration of the outer coating is optional, but contains the contact area as shown in the drawing. The external coating must be earthed.
7. This area must be kept clean.
8. Recessed cavity contact.

For:

TYPICAL OPERATING CONDITIONS

LIMITING VALUES

CIRCUIT DESIGN VALUES

MAXIMUM CIRCUIT VALUES

please refer to type A59-11W

T.V. PICTURE TUBE

59 cm (23 in), 110°, rectangular direct vision picture tube with integral protection for black- and white T.V. The rimband leaves the edge of the faceplate free.

QUICK REFERENCE DATA		
Face diagonal	59	cm (23 in)
Deflection angle	110°	
Overall length	359	mm
Neck diameter	28.6	mm
Light transmission of faceglass	45	%
Focusing		electrostatic
Bulb		reinforced
Heating	6.3 V, 300	mA

SCREEN

Metal backed phosphor

Luminescence	white		
Light transmission of face glass		45	%
Useful diagonal	min.	566	mm
Useful width	min.	489	mm
Useful height	min.	385	mm

HEATING

Indirect by A.C. or D.C.: series or parallel supply

Heater current	I_f	300	mA
Heater voltage	V_f	6.3	V

If the tube is connected in a series heater chain the surge heater voltage must not exceed 9.5 V_{rms} when the supply is switched on.

MECHANICAL DATA

Dimensions in mm

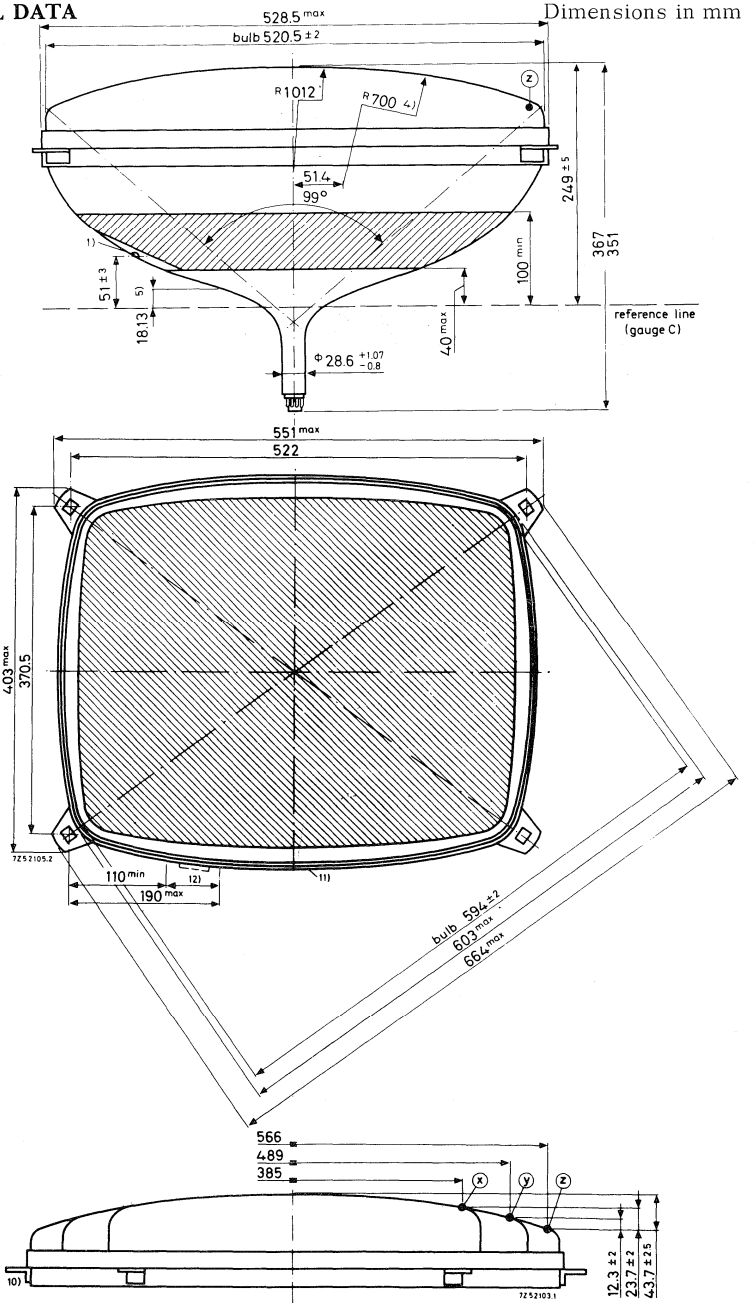

MECHANICAL DATA (continued)

Dimensions in mm

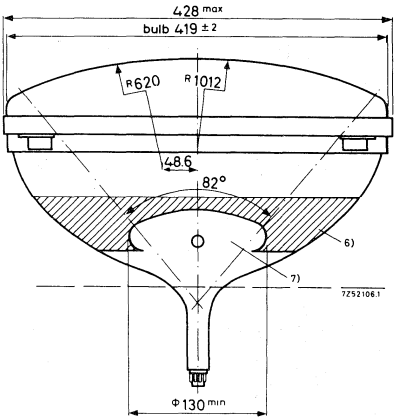

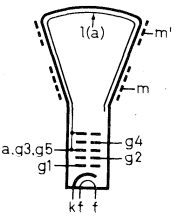

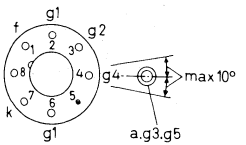

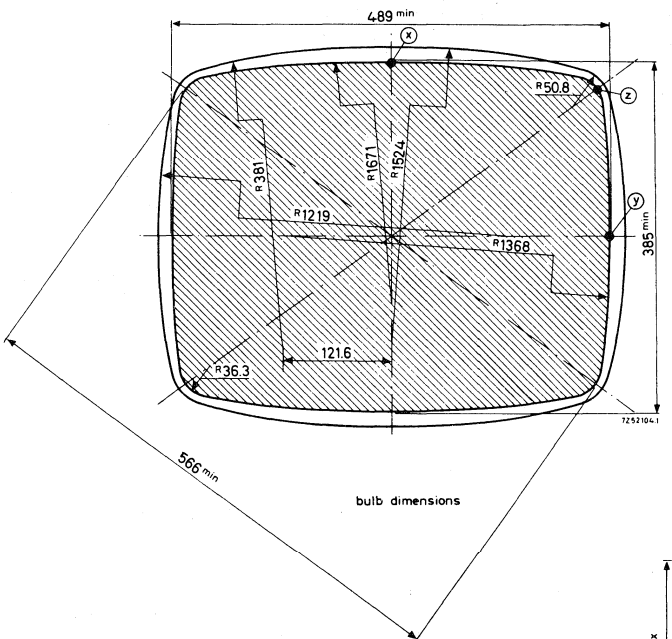

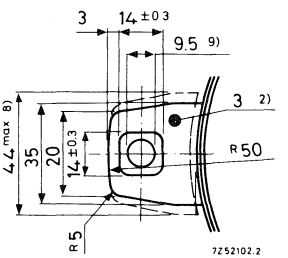

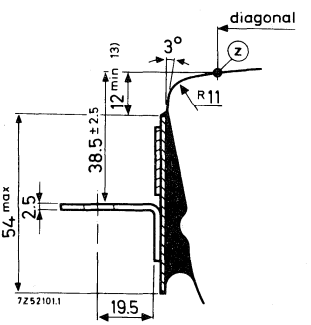

For notes see page 5.

Mounting position: any

Base : neo eightar 7 pin JEDEC B7-208. B8H, IEC-67-I-31a

Net weight : approx. 13 kg

The bottom circumference of the base wafer will fall within a circle concentric with the tube axis and having a diameter of 40 mm.

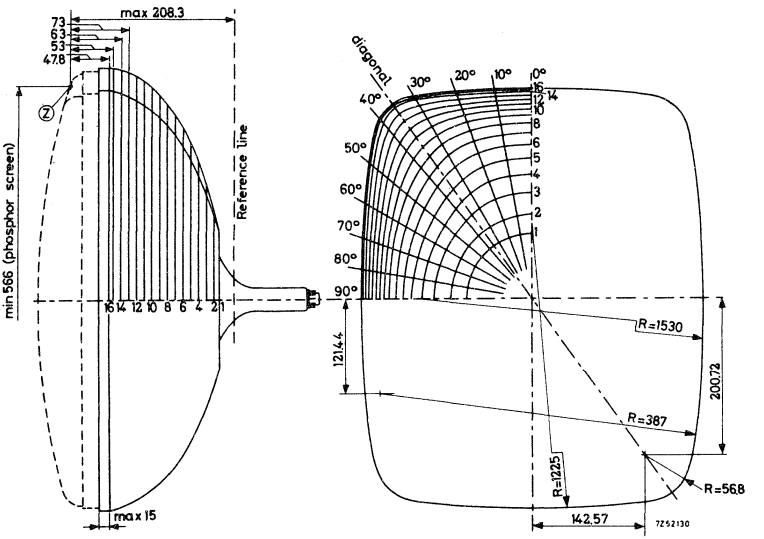

		Distance from centre (max. values)										
Section	Nom. distance from point "Z"	0° Long	10°	20°	30°	35° 23' Diagonal	40°	50°	60°	70°	80°	90° Short
1	190	77.5	77.5	77.5	77.5	77.5	77.5	77.5	77.5	77.5	77.5	77.5
2	183	101.2	101.2	101.2	101.2	101.2	101.2	101.2	101.2	101.2	101.2	101.2
3	173	130.3	131.0	131.1	129.6	127.9	126.3	123.5	121.8	121.1	120.7	121.1
4	163	154.5	155.0	155.8	152.0	149.1	146.6	142.1	138.6	136.8	136.4	136.8
5	153	175.0	175.7	176.1	172.9	168.8	165.6	159.3	154.2	151.0	149.7	149.8
6	143	192.7	193.7	194.3	191.9	187.2	183.1	175.4	168.7	164.4	161.5	161.0
7	133	207.9	209.4	210.9	209.0	204.1	199.3	190.2	181.8	176.2	171.9	170.5
8	123	221.0	222.8	225.4	224.6	220.3	215.0	203.9	193.8	186.5	181.2	178.8
9	113	231.8	233.8	238.1	239.2	235.7	230.3	216.5	204.4	195.7	189.5	186.9
10	103	241.5	243.6	248.7	252.6	250.3	244.7	228.3	214.4	203.7	196.8	194.1
11	93	249.6	252.0	258.5	264.4	263.9	258.2	239.1	223.2	211.0	203.3	200.9
12	83	255.9	258.7	266.2	274.9	276.3	271.0	249.0	230.6	217.1	208.8	206.5
13	73	260.7	263.7	272.3	284.4	287.6	282.8	257.7	236.3	221.7	213.2	210.7
14	63	264.0	267.1	276.6	292.0	297.2	292.7	264.4	240.3	224.8	216.3	213.7
15	53	265.9	269.1	279.0	296.2	302.3	297.7	267.7	242.8	226.7	218.0	215.2
16	47.8	266.25	269.45	279.37	297.01	303.0	298.64	268.44	243.25	227.23	218.35	215.5

NOTES TO OUTLINE DRAWING

1. Small cavity contact. I.E.C.-67-III-2.
2. The metal rimband must be earthed. The hole of 3 mm dia in each lug is provided for this purpose.
4. The screen radius of 700 mm applies also to the diagonal.
5. End of guaranteed contour. The maximum contour from reference line towards screen is given by the reference line gauge C (18.13 mm).
6. The configuration of the external conductive coating may be different but contains the contact area as shown in the drawing.
   The external conductive coating must be earthed.
7. This area must be kept clean.
8. Minimum space to be reserved for mounting lug.
9. The mounting screws in the cabinet must be situated inside a circle of 9.5 mm diameter drawn around the true geometrical positions, i.e. at the corners of a rectangle of 522 x 370.5 mm.
10. The displacement of any lug with respect to the plane through the other three lugs is max. 2 mm.
11. Max. curvatures of the outside tension band are nominal bulbradius + 4 mm.
12. Area for clip on tension band. Max. thickness with respect to bulb 8 mm.
13. Distance from reference point Z to any hardware.

CAPACITANCES

Final accelerator to external conductive coating	$C_{a,g_3,g_5/m}$	<	2500	pF
		>	1700	pF
Final accelerator to metal band	$C_{a,g_3,g_5/m'}$		450	pF
Cathode to all	C_k		5	pF
Grid No. 1 to all	C_{g_1}		7	pF

FOCUSING electrostatic

DEFLECTION magnetic

Diagonal deflection angle	110°
Horizontal deflection angle	99°
Vertical deflection angle	82°

PICTURE CENTRING MAGNET

Field intensity perpendicular to the tube axis adjustable from 0 to 800 A/m (0 to 10 Oerstedt).
Maximum distance between centre of field of this magnet and reference line: 57 mm

TYPICAL OPERATING CONDITIONS

Grid drive service

Final accelerator voltage	V_{a,g_3,g_5}	20	kV
Focusing electrode voltage	V_{g_4}	0 to 400	V [1]
Grid No. 2 voltage	V_{g_2}	400	V
Grid No. 1 voltage for visual extinction of focused raster	V_{g_1}	-40 to -77	V

Cathode drive service

Voltages are specified with respect to grid No. 1

Final accelerator voltage	V_{a,g_3,g_5}	20	kV
Focusing electrode voltage	V_{g_4}	0 to 400	V [1]
Grid No. 2 voltage	V_{g_2}	400	V
Cathode voltage for visual extinction of focused raster	V_k	36 to 66	V

[1] Individual tubes will have optimum focus within this range. In general an acceptable picture will be obtained with a fixed focus voltage.

LIMITING VALUES (Design centre rating system, unless otherwise stated)

Final accelerator voltage at $I_{a,g_3,g_5} = 0$	V_{a,g_3,g_5}	max. min.	20 12	kV kV [1]
Grid No.4 voltage.				
positive	V_{g_4}	max.	1000	V
negative	$-V_{g_4}$	max.	500	V
Grid No.2 voltage	V_{g_2}	max. min.	700 350	V [3] V
Grid No.2 to grid No.1 voltage	V_{g_2/g_1}	max.	850	V
Grid No.1 voltage				
positive	V_{g_1}	max.	0	V
positive peak	$V_{g_{1p}}$	max.	2	V
negative	$-V_{g_1}$	max.	150	V
negative peak	$-V_{g_{1p}}$	max.	400	V [2]
Cathode to heater voltage,				
positive	$V_{k/f}$	max.	250	V
positive peak	V_{k/f_p}	max.	300	V
negative	$-V_{k/f}$	max.	135	V
negative peak	$-V_{k/f_p}$	max.	180	V
positive during equipment warm-up period not exceeding 15 s	$V_{k/f}$	max.	410	V [4]

[1]) Absolute maximum rating system.

[2]) Maximum pulse duration 22% of a cycle but maximum 1.5 ms.

[3]) At $V_{g_1/k} = 0$ V.

[4]) Between 15 s and 45 s after switching on a decrease in k/f voltage, linear proportional with time, from 410 V to 250 V is permissible.

CIRCUIT DESIGN VALUES

Grid No.4 current,				
positive	I_{g_4}	max.	25	μA
negative	$-I_{g_4}$	max.	25	μA
Grid No.2 current				
positive	I_{g_2}	max.	5	μA
negative	$-I_{g_2}$	max.	5	μA

MAXIMUM CIRCUIT VALUES

Resistance between cathode and heater	$R_{k/f}$	max.	1	MΩ
Impedance between cathode and heater	$Z_{k/f}$ (50 Hz)	max.	0.1	MΩ
Grid No.1 circuit resistance	R_{g_1}	max.	1.5	MΩ
Grid No.1 circuit impedance	Z_{g_1} (50 Hz)	max.	0.5	MΩ
Resistance between external conductive coating and rimband	$R_{m/m'}$	min.	2	MΩ

In order to avoid excessive hum, the A.C. component of the heater to chassis voltage should be as low as possible and must not exceed 20 V_{rms}.

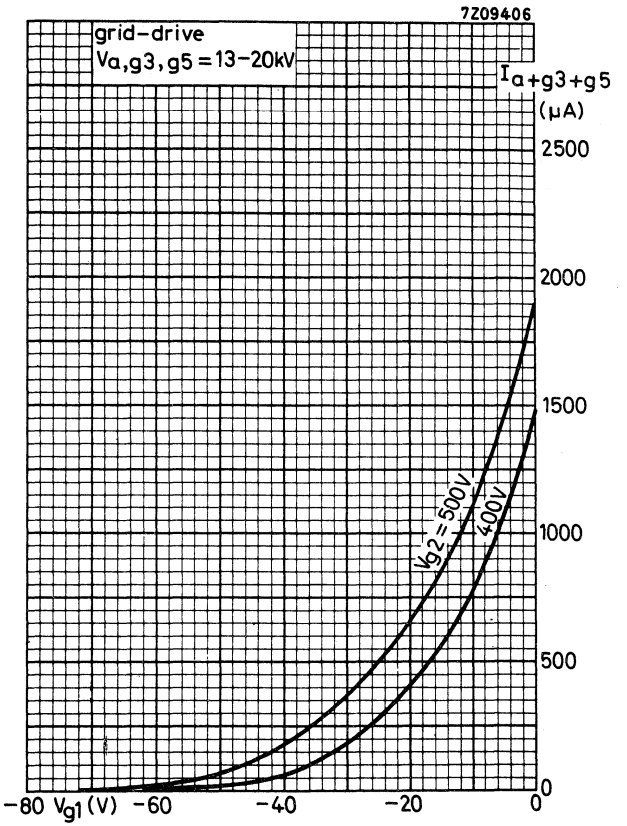

Final accelerator current as a function of grid No. 1 voltage

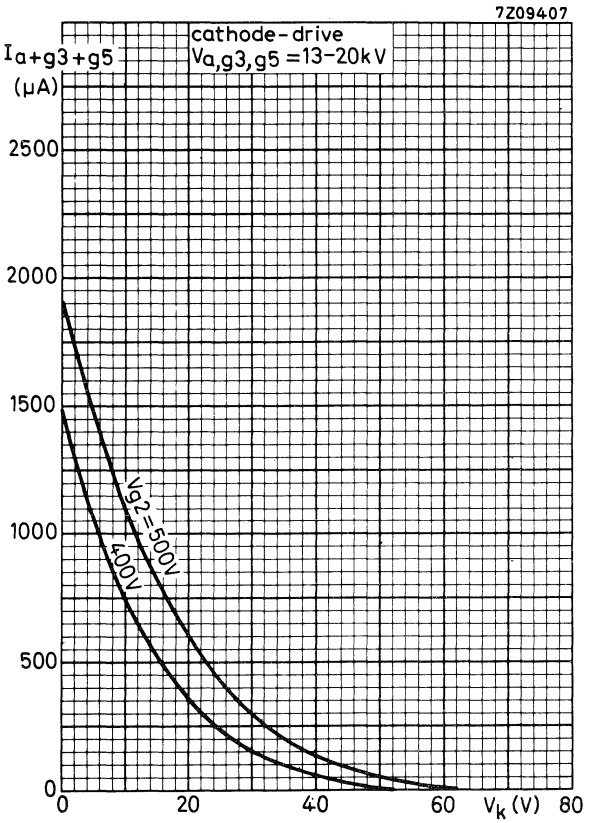

Final accelerator current as a function of cathode voltage

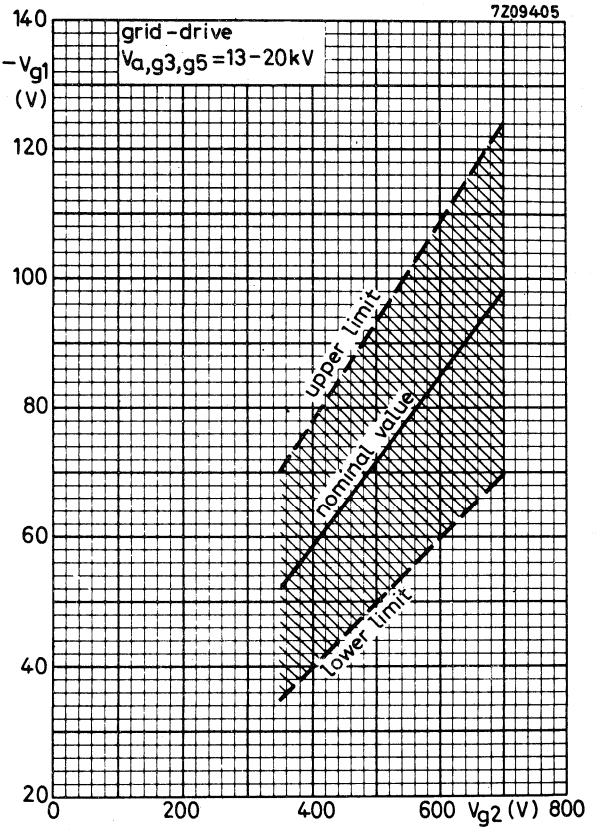

Limits of grid No.1 cut-off voltage as a function of grid No.2 voltage

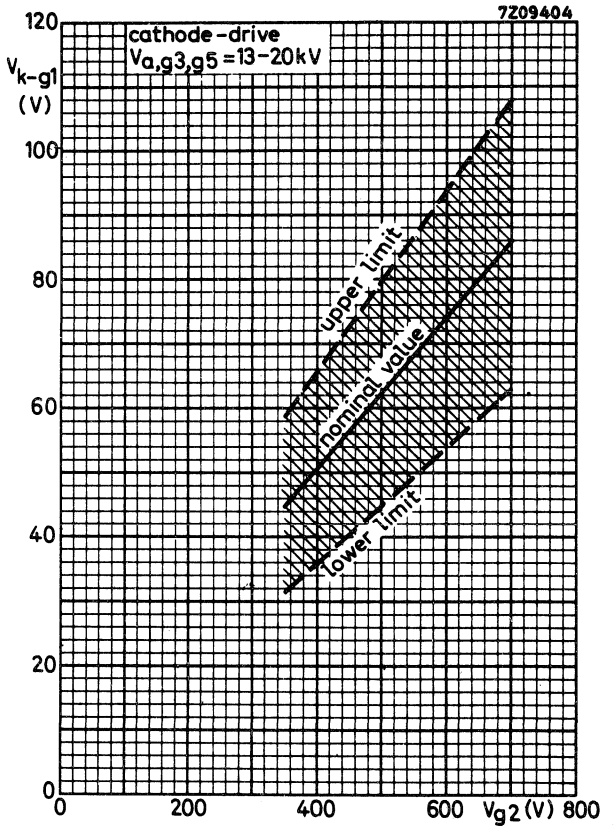

Limits of cathode cut-off voltage as a function of grid No. 2 voltage

T.V. PICTURE TUBE

61 cm (24 in), 110°, rectangular direct vision picture tube with integral protection for black- and white T.V. The rimband leaves the edge of the faceplate free.

QUICK REFERENCE DATA	
Face diagonal	61 cm (24 in)
Deflection angle	110°
Overall length	362 mm
Neck diameter	28.6 mm
Light transmission of face glass	42 %
Focusing	electrostatic
Bulb	reinforced
Heating	6.3 V, 300 mA

SCREEN

Metal backed phosphor			
Luminescence	white		
Light transmission of face glass		42	%
Useful diagonal	min.	577.5	mm
Useful width	min.	481	mm
Useful height	min.	375	mm

HEATING

Indirect by A.C. or D.C.; series or parallel supply

Heater current	I_f	300	mA
Heater voltage	V_f	6.3	V

If the tube is connected in a series heater chain the surge heater voltage must not exceed 9.5 V_{rms} when the supply is switched on.

Data based on pre-production tubes.

MECHANICAL DATA

Dimensions in mm

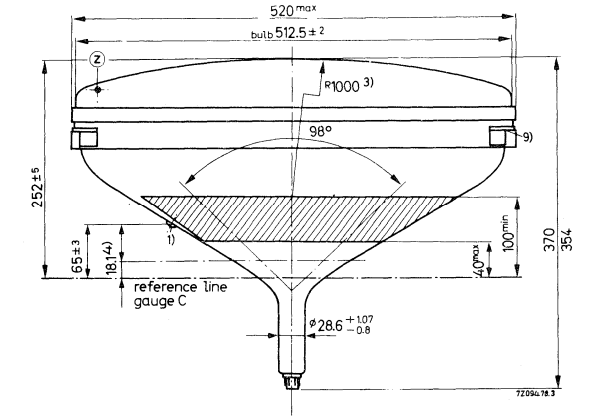

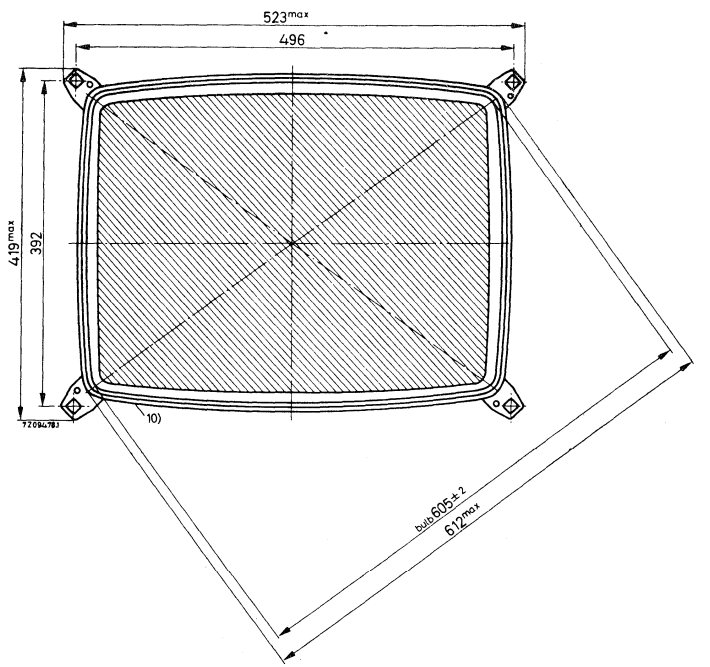

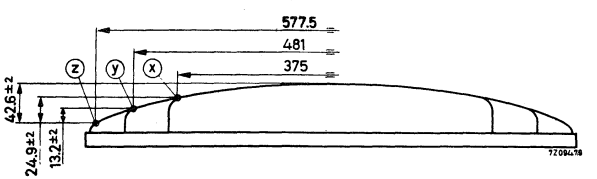

MECHANICAL DATA (continued)

Dimensions in mm

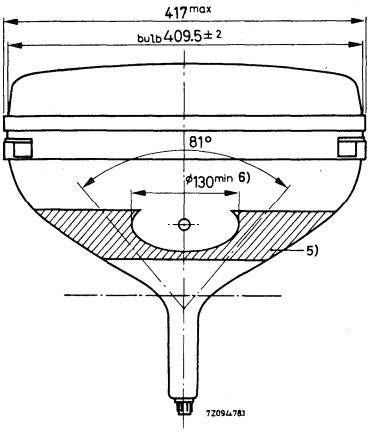

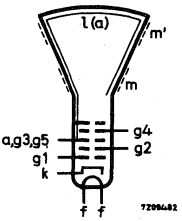

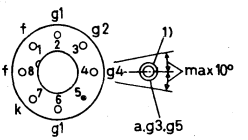

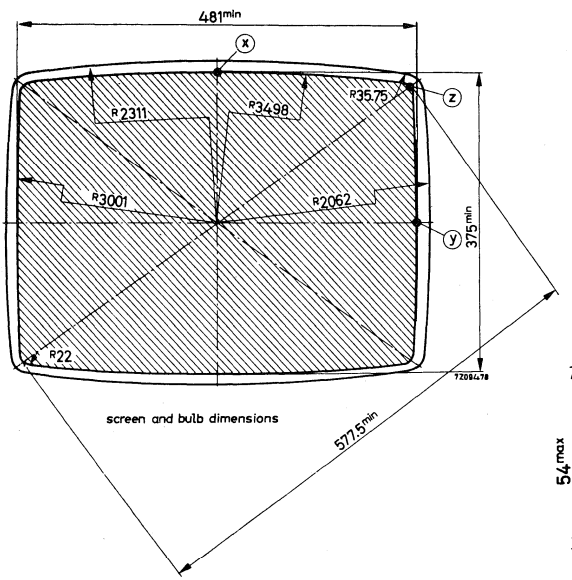

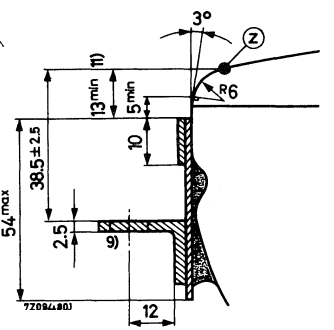

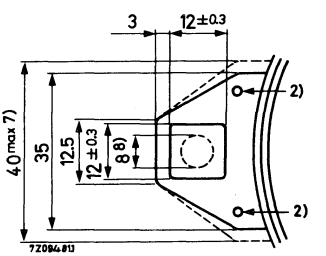

For notes see page 4

Mounting position: any

Base : neo eightar 7 pin JEDEC B7-208, B8H, IEC-67-I-31a

Net weight : approx. 13.5 kg

The bottom circumference of the base wafer will fall within a circle concentric with the tube axis and having a diameter of 40 mm.
The socket for the base should not be rigidly mounted: it should have flexible leads and be allowed to move freely.

NOTES TO OUTLINE DRAWING

1. Small cavity contact. I.E.C.-67-III-2.
2. The metal rimband must be earthed. The holes of 3 mm dia in each lug are provided for this purpose.
3. Spherical faceplate.
4. End of guaranteed contour. The maximum contour from reference line towards screen is given by the reference line gauge C (18.13 mm).
5. The configuration of the external conductive coating may be different but contains the contact area as shown in the drawing.
   The external conductive coating must be earthed.
6. This area must be kept clean.
7. Minimum space to be reserved for mounting lug.
8. The mounting screws in the cabinet must be situated inside a circle of 8 mm diameter drawn around the true geometrical position; i.e. at the corners of a rectangle of 496 x 392 mm.
9. The displacement of any lug with respect to the plane through the other three lugs is max. 2 mm.
10. The max. outer contour of the tube with the rimband is determined by adding 5 mm to the nominal bulb dimensions.
11. Distance from reference point Z to any hardware.

MAXIMUM CONE CONTOUR DRAWING

Dimensions in mm ←

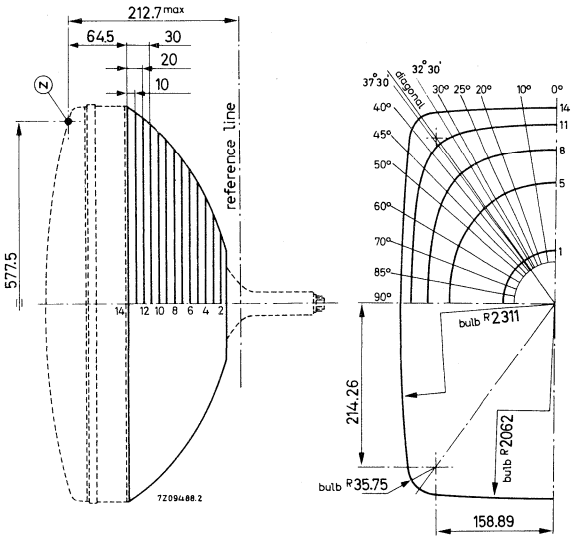

Section	Distance from section 14	Distance from centre (max. values)															
		Long axis 0°	10°	20°	25°	30°	32°30'	Diagon	37°30'	40°	45°	50°	60°	70°	80°	short axis 90°
1	130 nom.	72.86	72.43	71.56	71.11	70.71	70.54	70.30	70.25	70.15	70.01	69.99	70.24	70.80	71.46	71.80
2	120 "	104.40	102.55	99.35	97.84	96.53	95.97	95.20	95.05	94.70	94.22	94.04	94.54	96.03	98.03	99.25
3	110 "	134.30	131.46	126.54	124.19	122.11	121.19	119.90	119.64	119.00	118.03	117.44	117.40	118.67	120.68	122.00
4	100 "	160.37	157.14	151.14	148.11	145.33	144.05	142.19	141.79	140.81	139.17	137.94	136.69	136.86	137.91	138.71
5	90 "	178.69	176.94	172.71	170.14	167.47	166.14	164.01	163.53	162.27	159.91	157.77	154.28	151.93	150.65	150.29
6	80 "	193.31	193.01	191.41	189.88	187.82	186.61	184.40	183.86	182.35	179.17	175.87	169.55	164.36	160.95	159.75
7	70 "	205.70	206.53	207.62	207.47	206.43	205.50	203.39	202.80	201.05	196.92	192.23	182.71	174.80	169.72	167.95
8	60 "	216.80	212.48	222.08	223.50	223.81	223.35	221.50	220.87	218.87	213.56	207.21	194.27	183.94	177.56	175.40
9	50 "	226.93	229.25	235.00	238.05	240.03	240.27	238.85	238.19	235.89	229.04	220.74	204.42	192.07	184.72	182.29
10	40 "	235.95	238.74	246.30	250.94	254.89	256.11	255.38	254.69	252.07	243.23	232.74	213.25	199.29	191.22	188.59
11	30 "	243.70	246.84	255.85	261.98	268.11	270.64	271.00	270.31	267.36	256.04	243.14	220.83	205.65	197.07	194.30
12	20 "	250.04	253.41	263.50	270.92	279.32	283.47	285.46	284.84	281.59	267.21	251.81	227.16	211.13	202.21	199.35
13	10 "	255.00	258.49	269.28	277.65	288.05	293.90	298.03	297.55	294.10	276.22	258.48	232.14	215.59	206.49	203.59
14	0 "	258.48	262.03	273.11	281.90	293.23	299.98	305.40	305.12	301.53	281.60	262.67	235.55	218.75	209.56	206.62

CAPACITANCES

Final accelerator to external conductive coating	$C_{a,g_3,g_5/m}$	<	2500	pF
		>	1600	pF
Final accelerator to metal band	$C_{a,g_3,g_5/m'}$		500	pF
Cathode to all	C_k		5	pF
Grid No.1 to all	C_{g_1}		7	pF

FOCUSING electrostatic

DEFLECTION magnetic

Diagonal deflection angle	110°
Horizontal deflection angle	98°
Vertical deflection angle	81°

PICTURE CENTRING MAGNET

Field intensity perpendicular to the tube axis adjustable from 0 to 800 A/m (0 to 10 Oerstedt).
Maximum distance between centre of field of this magnet and reference line: 57 mm.

TYPICAL OPERATING CONDITIONS

Grid drive service

Final accelerator voltage	V_{a,g_3,g_5}	20	kV
Focusing electrode voltage	V_{g_4}	0 to 400	V[1])
Grid No.2 voltage	V_{g_2}	400	V
Grid No.1 voltage for visual extinction of focused raster	V_{g_1}	-40 to -77	V

Cathode drive service

Voltages are specified with respect to grid No.1

Final accelerator voltage	V_{a,g_3,g_5}	20	kV
Focusing electrode voltage	V_{g_4}	0 to 400	V[1])
Grid No.2 voltage	V_{g_2}	400	V
Cathode voltage for visual extinction of focused raster	V_k	36 to 66	V

1) Individual tubes will have optimum focus within this range. In general an acceptable picture will be obtained with a fixed focus voltage.

LIMITING VALUES (Design centre rating system, unless otherwise stated)

Final accelerator voltage at $I_{a,g_3,g_5} = 0$	V_{a,g_3,g_5}	max.	20	kV
		min.	12	kV [1]
Grid No.4 voltage,				
positive	V_{g_4}	max.	1000	V
negative	$-V_{g_4}$	max.	500	V
Grid No.2 voltage	V_{g_2}	max.	700	V [3]
		min.	350	V
Grid No.2 to grid No.1 voltage	V_{g_2/g_1}	max.	850	V
Grid No.1 voltage				
positive	V_{g_1}	max.	0	V
positive peak	$V_{g_{1p}}$	max.	2	V
negative	$-V_{g_1}$	max.	150	V
negative peak	$-V_{g_{1p}}$	max.	400	V [2]
Cathode to heater voltage,				
positive	$V_{k/f}$	max.	250	V
positive peak	V_{k/f_p}	max.	300	V
negative	$-V_{k/f}$	max.	135	V
negative peak	$-V_{k/f_p}$	max.	180	V
positive during equipment warm-up period not exceeding 15 s	$V_{k/f}$	max.	410	V [4]

1) Absolute maximum rating system.

2) Maximum pulse duration 22% of a cycle but maximum 1.5 ms.

3) At $V_{g_1/k} = 0$ V.

4) Between 15 s and 45 s after switching on a decrease in k/f voltage, linear proportional with time, from 410 V to 250 V is permissible.

CIRCUIT DESIGN VALUES

Grid No.4 current,				
positive	I_{g_4}	max.	25	μA
negative	$-I_{g_4}$	max.	25	μA
Grid No.2 current				
positive	I_{g_2}	max.	5	μA
negative	$-I_{g_2}$	max.	5	μA

MAXIMUM CIRCUIT VALUES

Resistance between cathode and heater	$R_{k/f}$	max.	1	MΩ
Impedance between cathode and heater	$Z_{k/f}$ (50 Hz)	max.	0.1	MΩ
Grid No.1 circuit resistance	R_{g_1}	max.	1.5	MΩ
Grid No.1 circuit impedance	Z_{g_1} (50 Hz)	max.	0.5	MΩ
Resistance between external conductive coating and rimband	$R_{m/m'}$	min.	2	MΩ

In order to avoid excessive hum, the A.C. component of the heater to chassis voltage should be as low as possible and must not exceed 20 V_{rms}.

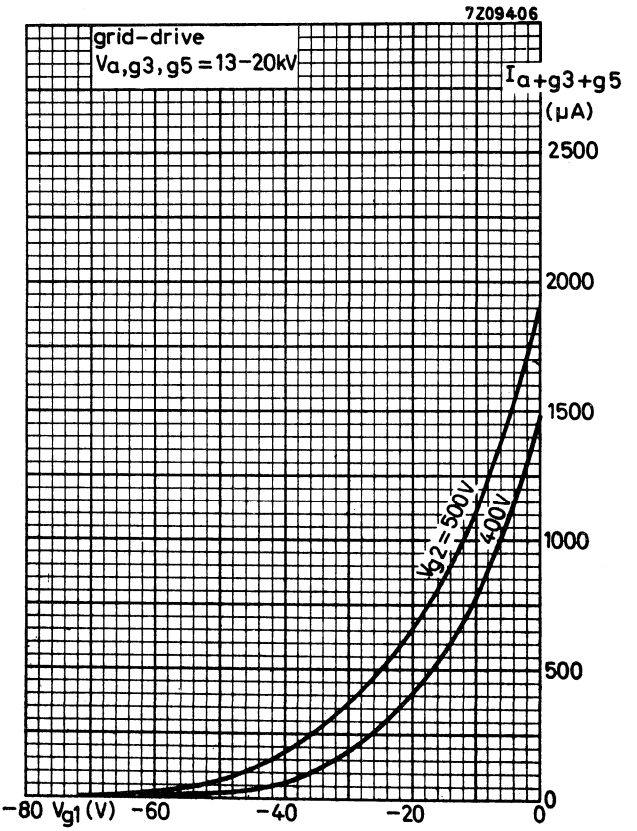

Final accelerator current as a function of grid No. 1 voltage

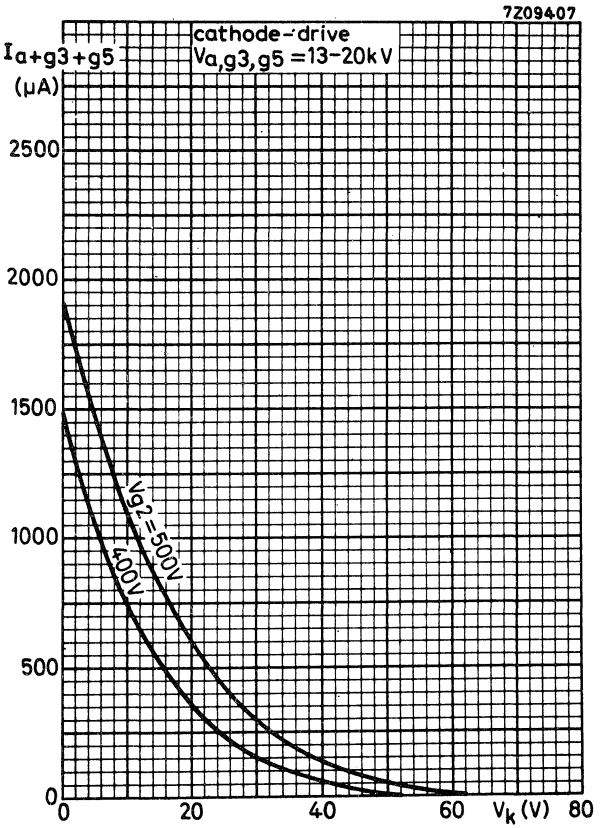

Final accelerator current as a function of cathode voltage

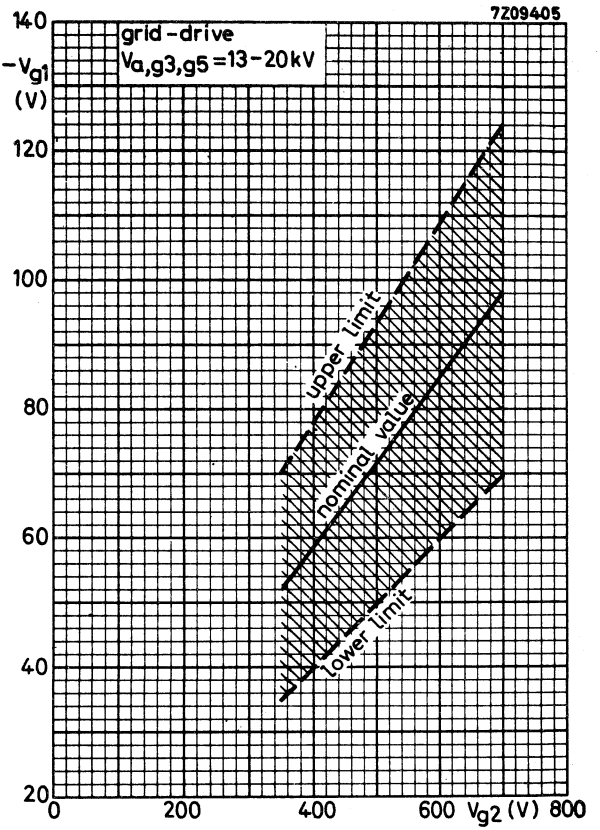

Limits of grid No. 1 cut-off voltage as a function of grid No. 2 voltage

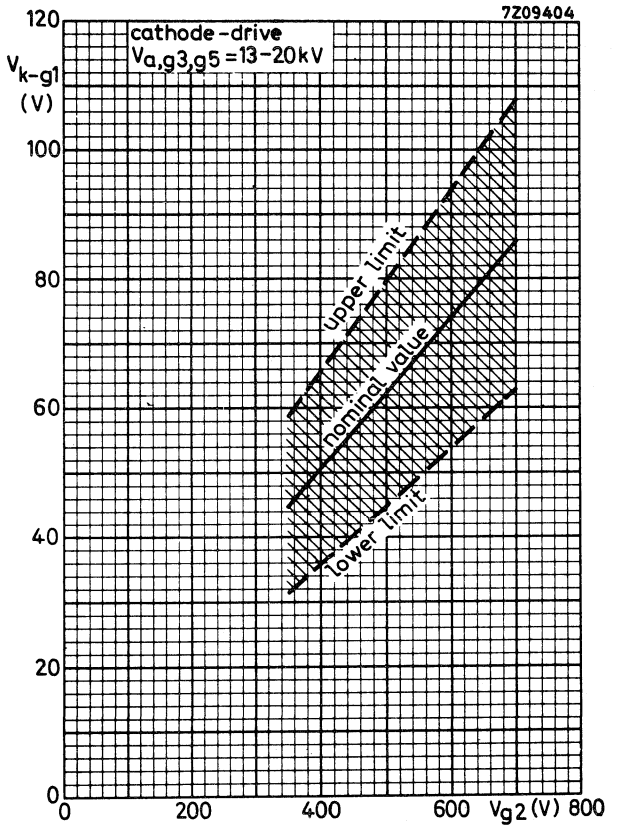

Limits of cathode cut-off voltage as a function of grid No. 2 voltage

90° RECTANGULAR COLOUR TELEVISION PICTURE TUBE WITH INTEGRAL PROTECTION

Three-gun temperature-compensated shadow-mask rectangular colour television tube with electrostatic focus, magnetic deflection and convergence, metal-backed three-colour phosphor dot screen. A high white brightness is obtained by the use of improved red, green and blue phosphors at near unity current ratio. Temperature compensating the shadow-mask has led to optimum field purity and good uniformity during warm-up. Minimum occurrence of the moiré effect is ensured by optimizing the mask for the reproduction of 625-line pictures. The tube has a reinforced envelope and therefore no separate safety screen is necessary.

QUICK REFERENCE DATA		
TEMPERATURE-COMPENSATED SHADOW-MASK		
SHADOW-MASK OPTIMIZED FOR 625-LINE SYSTEM		
HIGH WHITE BRIGHTNESS AT UNITY CURRENT RATIO		
Face diagonal	63	cm
Deflection angle	90	o
Neck length	164.2	mm
Envelope	reinforced	
Focusing	electrostatic	
Deflection	magnetic	
Convergence	magnetic	
Heating	6.3 V, 900	mA
Light transmission of face glass	52.5	%

SCREEN

Metal-backed tricolour phosphor dots

Phosphor type	Red: Europium activated rare earth Green and blue: sulphide type	
Dot arrangement	Triangular	
Spacing between centres of adjacent dot trios	0.81	mm
Light transmission at centre of face glass	52.5	%

HEATING

Indirect by A.C. or D.C.; parallel or series supply

Heater voltage	V_f	6.3	V
Heater current	I_f	900	mA

For maximum cathode life it is recommended that the heater supply be regulated at 6.3 V. If the tube is connected in a series heater chain the surge heater voltage must not exceed 9.5 V_{rms} when the supply is switched on.

CAPACITANCES

Final accelerator to external conductive coating	$C_{ag_5g_4/m}$	max.	2500	pF
		min.	2000	pF
Final accelerator to metal rimband	$C_{ag_5g_4/m'}$		500	pF
Grid No.1 of any gun to all other electrodes	C_{g_1}		7	pF
Cathodes of all guns (connected in parallel) to all other electrodes	C_k		15	pF
Cathode of any gun to all other electrodes	C_{k_R}		5	pF
	C_{k_G}		5	pF
	C_{k_B}		5	pF
Grid No.3 (focusing electrode) to all other electrodes	C_{g_3}		7	pF

FOCUSING electrostatic

DEFLECTION magnetic

Diagonal deflection angle	90°
Horizontal deflection angle	79°
Vertical deflection angle	62°

CONVERGENCE magnetic

MECHANICAL DATA

Overall length			521 ± 9.5	mm
Neck length			164.2 ± 4.5	mm
Diagonal	of bulb	max.	633	mm
Horizontal axis	of bulb	max.	556	mm
Vertical axis	of bulb	max.	450.5	mm
Useful screen diagonal		min.	584	mm
horizontal axis		min.	504	mm
vertical axis		min.	396	mm

MECHANICAL DATA (continued)

Mounting position: any

Net weight: approx. 188N (18.8 kg)

Base: 12 pin base JEDEC B12-244 but with a 5 mm shorter spigot.

Anode contact: Small cavity contact J1-21, IEC 67-III-2.

Magnetic shielding

Magnetic shielding should be provided by means of a metal shield extending 28 cm over the cone of the tube measured from the centre of the face plate. The metal shell is preferably constructed of min. 0.5 mm cold rolled steel properly annealed. The air gap between the shield and the metal rimband should be as small as possible and not exceed 10 mm. The magnetic shield should be connected to the outer conductive coating.

NOTES TO OUTLINE DRAWING (See pages 4 and 5)

1. Reference line, determined by the plane of the upper edge of the flange of the reference line gauge, when the gauge is resting on the cone. Gauge see page 10.
2. The socket for this base should not be rigidly mounted; it should have flexible leads and be allowed to move freely. Bottom circumference of base will fall within a circle concentric with bulb axis and having a diameter of 55 mm.
3. Configuration of outer conductive coating may be different, but will contain the contact area as shown in the drawing.
4. To clean this area, whipe only with a soft dry lintless cloth.
5. Opening of metal rimband. Eccentricity with respect to the centre of the inner glass contour max. 1.5 mm.
6. Meniscus of resin filler on screen.
7. The displacement of any lug with respect to the plane through the three other lugs is max. 2 mm.
8. Minimum space to be reserved for mounting lug.
9. The position of the mounting screw in the cabinet must be within a circle of 9.5 mm diameter drawn around the true geometrical positions, i.e. the corners of a rectangle of 517 mm x 411 mm.
10. Coördinates for radius R = 30 mm : x = 213.66 mm, y = 151.63 mm.

MECHANICAL DATA (continued) Dimensions in mm

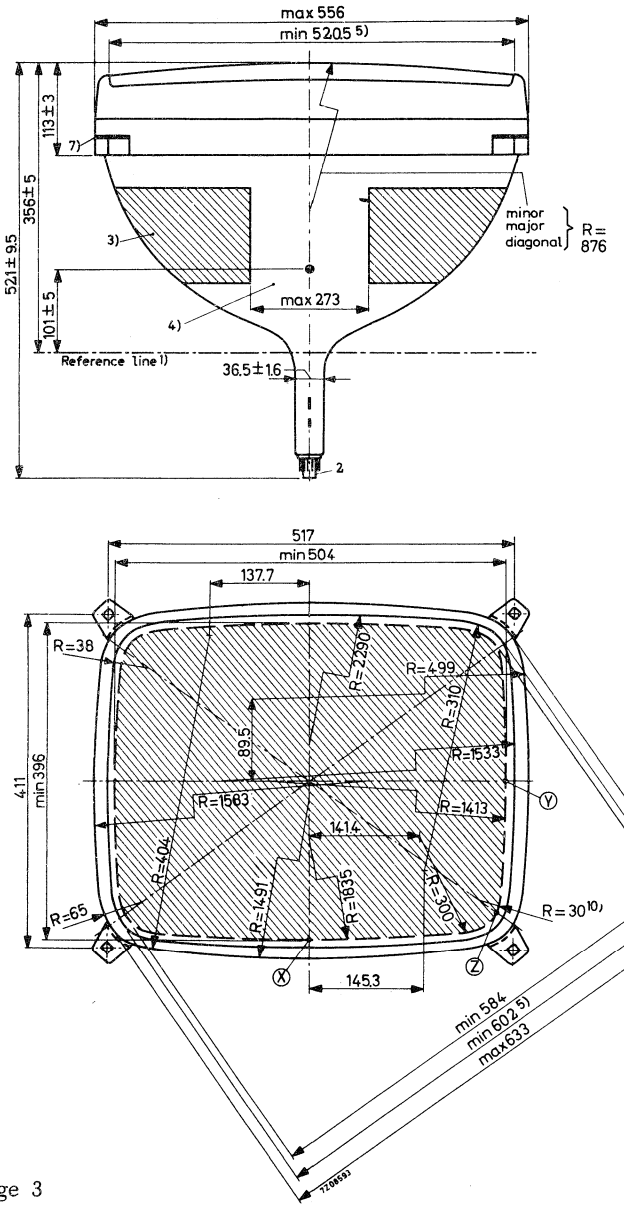

Notes see page 3

MECHANICAL DATA (continued)

Dimensions in mm

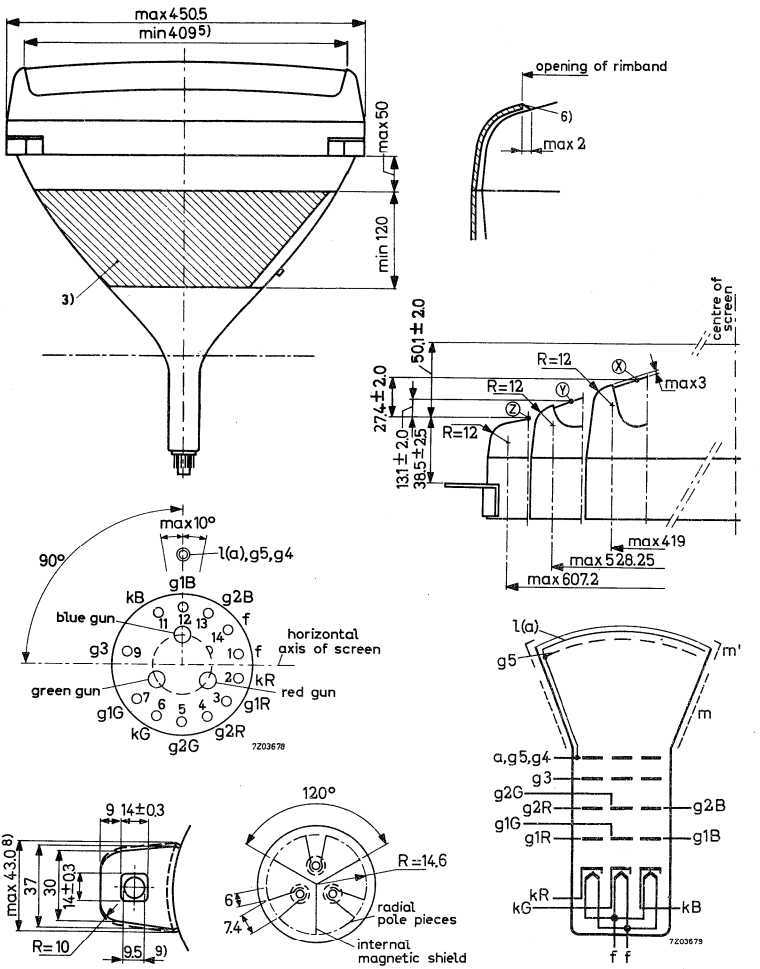

Notes see page 3

MAXIMUM CONE CONTOUR DRAWING

Dimensions in mm

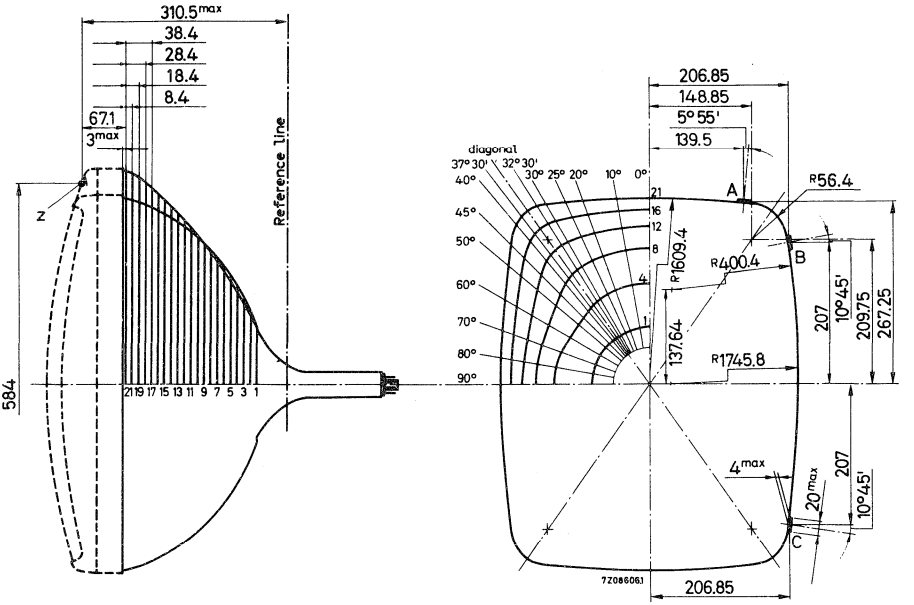

Section	Nom. distance from point Z	Distance from centre (max. values)														
		Long axis 0°	10°	20°	25°	30°	32°30'	35°21'38" Diag.	37°30'	40°	45°	50°	60°	70°	80°	Short axis 90°
1	265.5	82.5	82.6	83.0	83.0	83.0	83.0	83.0	83.0	83.0	83.3	83.5	83.5	83.0	82.8	82.8
2	255.5	107.6	107.4	106.7	106.1	105.7	105.5	105.2	105.1	105.0	104.7	104.5	106.3	111.0	115.0	115.5
3	245.5	129.3	129.5	128.0	127.3	126.6	125.8	124.8	124.0	123.2	122.2	121.4	122.5	126.9	129.9	130.2
4	235.5	147.4	147.2	146.0	145.0	144.8	144.2	142.6	141.2	139.6	137.2	135.4	134.7	138.0	140.0	140.0
5	225.5	162.8	162.8	161.6	160.7	160.3	159.4	157.7	156.2	154.3	150.4	147.7	145.0	146.4	148.2	148.0
6	215.5	176.3	176.3	175.4	175.0	174.3	173.5	171.6	169.9	167.9	163.1	159.0	154.4	154.0	155.4	155.3
7	205.5	188.2	188.2	187.8	187.6	187.2	186.6	185.2	183.4	181.1	175.4	169.9	163.5	161.2	161.6	161.5
8	195.5	198.8	199.0	199.2	199.4	199.6	199.1	197.8	196.1	193.4	186.9	180.3	171.9	170.0	167.4	167.2
9	185.5	208.2	208.8	209.6	210.3	211.1	210.9	209.7	207.8	205.3	197.9	190.3	179.7	174.4	172.9	172.7
10	175.5	216.9	217.9	219.2	220.5	222.2	222.2	221.3	218.9	216.1	208.0	199.4	187.2	180.8	178.2	178.1
11	165.5	224.7	225.6	227.7	229.7	231.9	232.2	231.6	229.6	226.4	217.5	208.0	194.4	186.9	183.5	182.9
12	155.5	231.9	232.9	235.9	238.5	241.4	242.1	241.9	240.1	237.0	226.9	216.4	201.5	191.5	188.6	187.7
13	145.5	238.2	239.7	243.6	246.8	250.5	251.7	251.9	250.4	247.0	236.0	224.5	208.3	198.0	193.4	192.3
14	135.5	244.4	246.3	251.0	254.9	259.5	261.3	261.8	260.5	257.1	245.3	232.6	214.8	203.4	198.2	196.8
15	125.5	250.3	252.2	258.0	262.3	268.1	270.5	271.3	270.1	266.3	254.0	240.4	220.9	208.5	202.4	200.3
16	115.5	256.1	258.2	264.9	270.0	276.6	279.6	280.7	279.3	275.4	262.4	247.8	226.8	213.7	206.6	204.1
17	105.5	260.0	263.4	270.8	276.8	284.7	287.9	289.3	287.9	283.9	270.0	254.7	232.3	218.5	210.5	207.7
18	95.5	265.6	268.3	276.4	283.3	292.4	295.7	297.6	296.3	292.1	277.0	261.0	237.6	223.1	214.3	211.2
19	85.5	269.4	272.4	281.5	289.4	299.4	302.9	305.2	304.2	299.6	283.8	267.1	242.6	227.2	217.9	214.7
20	75.5	272.3	275.5	286.0	294.0	304.6	309.4	311.1	310.5	305.9	289.8	272.5	247.0	230.6	221.2	218.0
21	67.1	273.3	276.79	287.64	296.17	307.1	311.8	313.6	312.6	308.79	292.55	275.38	248.85	232.15	222.91	219.95

TYPICAL OPERATING CONDITIONS

Final accelerator voltage	V_{a,g_5,g_4}	25	kV
Grid No.3 (focusing electrode) voltage	V_{g_3}	4.2 to 5	kV
Grid No.2 voltage for a spot cut-off voltage V_{g_1} = −105 V	V_{g_2}	210 to 495	V [1]
Grid No.1 voltage for spot cut-off at V_{g_2} = 300 V	V_{g_1}	−70 to −140	V [2]
Brightness at the centre of the screen		See page 21	

EQUIPMENT DESIGN VALUES (each gun if applicable)

Valid for final accelerator voltages between 20 kV and 27.5 kV.

Grid No.3 (focusing electrode) voltage	V_{g_3}	16.8 to 20	% of final accelerator voltage
Grid No.2 voltage [1]	V_{g_2}	See cut-off design chart page 22	
Grid No.1 voltage for visual extinction of focused spot (cut-off voltage) [2]	V_{g_1}	See cut-off design chart page 22	
Difference in cut-off voltages between guns in any tube	ΔV_{g_1}	lowest value is min. 65% of highest value	
Grid No.3 (focusing electrode) current	I_{g_3}	−15 to +15	μA
Grid No.2 current	I_{g_2}	−5 to +5	μA
Grid No.1 current at V_{g_1} = −150 V	I_{g_1}	−5 to +5	μA

		3)	4)	5)	
To produce white of the following CIE coördinates	x	0.310	0.265	0.281	
	y	0.316	0.290	0.311	
Percentage of total anode current supplied by each gun (typical)					
red gun		43.5	27.9	32.2	%
green gun		30.0	34.9	35.6	%
blue gun		26.5	37.2	32.2	%
Ratio of anode currents red gun to green gun	min.	1.05	0.60	0.65	
	av.	1.45	0.80	0.90	
	max.	2.00	1.10	1.25	
Ratio of anode currents red gun to blue gun	min.	1.20	0.55	0.75	
	av.	1.65	0.75	1.00	
	max.	2.25	1.05	1.35	

Notes see page 8

EQUIPMENT DESIGN VALUES (continued)

Required centring, measured at the centre of the screen in any direction	max.	15 mm
Correction which must be supplied by purifying magnet to compensate for mis-register (including that caused by earth's magnetic field) when using recommended components. Measured at the centre of the screen in any direction	max.	130 μm
Lateral distance between the blue spot and the converged red and green spots	max.	6.5 mm (in both directions)
Radial convergence displacement excluding effects of dynamic convergence (each beam)	max.	9.5 mm [6] (in both directions)

1) This range of V_{g_2} has to be used when in circuit design fixed values for cut-off of the three guns are used.

2) This range of V_{g_1} has to be used when in circuit design fixed values for V_{g_2} of the three guns are used.

3) To produce colour pictures with the best possible quality, this white point should be used as the transmission systems are based on this point. (Point C).

4) To produce black/white pictures a more bluish white point would be preferable. This white point corresponds virtually with the white point of current black/white picture tubes.

5) This point is a compromise between the white point C and the white point x = 0.265 and y = 0.290, given in order to enable good rendition of colour and black-and-white pictures with one white point.

6) Dynamic convergence to be effected by currents of approximately parabolic wave-shape synchronized with scanning.

LIMITING VALUES (Each gun if applicable) (Design centre rating system unless otherwise specified)

Final accelerator voltage	V_{a, g_5, g_4}	max.	27.5	kV 1)2)3)
		min.	20	kV 1)4)
Average current for 3 guns	I_a	max.	1000	μA 5)
Grid No.3 (focusing electrode) voltage	V_{g_3}	max.	6000	V
Grid No.2 voltage, peak, including video signal voltage	$V_{g_{2p}}$	max.	1000	V
Grid No.1 voltage,				
negative	$-V_{g_1}$	max.	400	V
negative, operating cut-off	$-V_{g_1}$	max.	200	V
positive	V_{g_1}	max.	0	V
positive peak	$V_{g_{1p}}$	max.	2	V
Cathode to heater voltage,				
positive	V_{kf}	max.	250	V 6)7)
positive peak	V_{kf_p}	max.	300	V
negative	$-V_{kf}$	max.	135	V
negative peak	$-V_{kf_p}$	max.	180	V

1) Absolute maximum rating system.

2) The X-ray dose rate remains below the acceptable value of 0.5 mr/h, measured with ionisation chambre when the tube is used within its limiting values.

3) For optimal operating conditions the final accelerator voltage has to be stabilized. Therefore its absolute maximum value can be approached in actual operation and for this reason this value is given instead of the design centre value. During adjustment on the production line this value is likely to be surpassed considerably. It is therefore strongly recommended to first make the necessary adjustments for normal operation without picture tube.

4) Operation of the tube at lower voltages impairs brightness and resolution and may have a detrimental effect on colour purity.

5) 1500μA permitted provided a current limiting circuit is used.

6) In order to avoid excessive hum the a.c. component of the heater to chassis voltage should be as low as possible and must not exceed 20 V_{RMS}.

7) During an equipment warm-up period not exceeding 15 s $V_{k/f}$ is allowed to rise to 410 V. Between 15 s and 45 s after switching on a decrease in $V_{k/f}$ proportional with time from 410 V to 250 V is permissible.

REMARK

With the high voltage used with this tube (max. 27.5 kV) internal flash-overs may occur. These may destroy the cathode(s) of the tube. Therefore it is necessary to provide protective circuits, using spark gaps.
The spark gaps must be connected as follows:

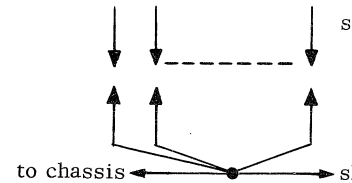

No other connections between the outer conductive coating and the chassis are permissible.
Additional information available on request.

REFERENCE LINE GAUGE Dimensions in mm

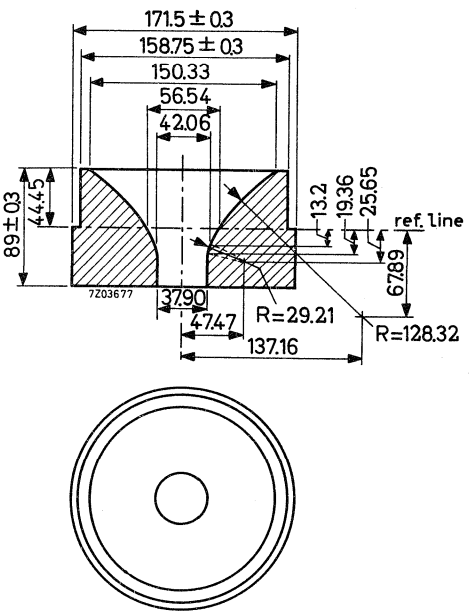

DESCRIPTION OF THE TUBE

The A63-11X is a rectangular temperature compensated shadow-mask colour picture tube for use in colour television receivers. The tube can display a picture, either in full colour or in black and white measuring 504 mm x 396 mm minimum (projected area of 1905 cm^2).

The A63-11X has

- a deflection angle of 90°
- a neck diameter of 36.5 mm
- a three-colour phosphor dot screen, composed of closely spaced dots in a regular pattern of tri-angular groups, each containing a red, a green and a blue light emitting dot.
- Three electron guns with axes tilted towards the screen centre, with electrostatic focusing systems and mounted side by side in the neck of the tube 120° apart.

Colour selection is effected by a metal graded-hole shadow mask positioned in front of the tricolour phosphor-dot screen. This mask is aligned with the dot pattern so that the electron beam from each gun lands only on phosphor dots of the associated colour.

The shadow mask has graded holes that increase gradually in diameter from the edge of the mask towards the centre. Grading enables correct purity to be achieved over the whole screen with minimum adjustment.

Although the three guns are tilted towards the screen centre so that their axes intersect at the shadow mask, lateral and radial convergence are necessary to ensure correct convergence over the entire screen. Each of the three guns is therefore provided with a pair of radial converging pole pieces.

Radial convergence can be achieved by means of magnets and coils mounted externally on the neck of the tube. The magnetic flux provided is coupled through the glass neck of the tube to associated internal pole pieces. The shape of the pole pieces, together with the internal magnetic shielding, is shown in Fig.1. Internal shielding prevents interaction of the various magnetic fields.

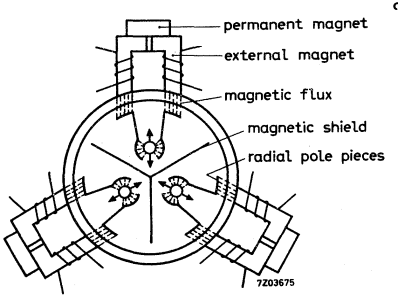

Fig.1

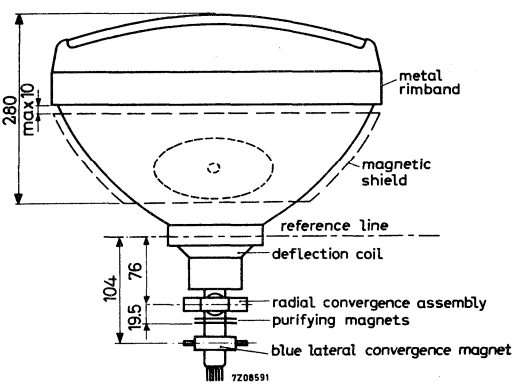

Fig.2

Fig.2 shows the position of the components on the neck of the tube.
Lateral convergence is achieved by a separate assembly mounted on the neck of the tube. This assembly causes horizontal movement of the blue beam, and simultaneously, movements of the red and green beams in the opposite direction.
Facilities for dynamic blue lateral convergence are also provided in this convergence assembly.

APPLICATION NOTES

1. Magnetic shielding

The tube should be fitted with a magnetic shield around the cone, to minimize the effects of external magnetic fields, including the horizontal, vertical and axial components of the earth's magnetic field. The latter so influences the colour purity that compensation by means of the purifying magnets is not possible.
The metal shield should preferably be constructed of coldrolled steel, at least 0.5 mm thick and properly annealed at 850 °C. Since the tube re-inforcing band is an essential part of the magnetic circuit used for degaussing, the air gap between the band and the shield should be as small as possible and certainly not more than 10 mm. To be effective, the shield must be degaussed as described under "Adjustment procedures". Building-in of an automatic degaussing system is advised.

2. Centring of raster on the screen.

Raster centring in a shadow-mask colour picture tube is achieved by passing direct current of the required value through each pair of deflection coils. The values for raster displacement given in the data apply when all components are properly adjusted.

3. Component considerations.

The necessary components are the deflection coil, the radial convergence assembly, the purifying magnets and the blue lateral convergence magnet.
Basically the functions of the components are:
- deflection of the three beams over the entire screen: deflection coil.
- good convergence of the three beams over the screen: radial convergence assembly and blue lateral convergence magnet.
- landing adjustment: purifying magnets and deflection coil

The mounting positions of the components are as follows:

The deflection coil: in such a way that its deflection centre coincides with the one used in the screen-laying process during manufacturing. The coil must therefore be designed so that sufficient movement in the axial direction is possible.

The radial convergence assembly: with its pole pieces centred above the convergence pole pieces inside the tube. Initially, the assembly should be mounted upright. Small rotations of the whole assembly influence the convergence and can be used during adjustment of the blue lateral correction to obtain optimum lateral convergence.

APPLICATION NOTES (continued)

The purifying magnets: over the gap between the electrode g3 and g4 of the gun, or still closer to the deflection coil. Placing the purifying magnets closer to the base results in poorer performance as the spot quality is adversely affected.

The blue lateral convergence magnet: as near as possible to the rear side of the purifying magnets but not shifted backwards more than halfway along electrode g3 of the gun.

3.1 Convergence

Static convergence, i.e. convergence of the three beams onto the centre of the screen, is usually accomplished with permanent magnets which are part of the radial convergence assembly, or with D.C. currents through the convergence coils in combinations with the lateral converging magnet.
The strength of the magnetic field that is adjustably coupled to the radial convergence pole pieces of the gun should be such that each beam can be moved 9.5 mm in both directions towards the centre of the screen excluding effects of dynamic convergence. The static blue lateral convergence magnet should provide a magnetic field adjustable in magnitude and polarity.
This field exerts a directive force on the blue beam and simultaneously a force in the opposite direction on the green and the red beams.
The displacement of the blue beam opposite to the movement of the red and green beams should be 6.5 mm in both directions.
With these four adjustable magnetic fields static convergence of the three beams can be attained.
For good convergence over the entire screen dynamic radial convergence is required together with a small amount of dynamic lateral convergence in line direction.
The radial convergence assembly consists fundamentally of three cores with associated windings. Through the windings are passed the necessary currents for maintaining convergence when the beams are deflected over the screen.
The required form of the currents can be obtained by adding a current with a sawtooth wave form to one with a parabolic wave form. Two separate windings are required for correction in the horizontal and the vertical direction. The parabolic and sawtooth currents should be adjustable in amplitude and the sawtooth currents and the vertical blue parabola should, in addition be adjustable in polarity.
The blue lateral convergence magnet consists of a core and associated windings to obtain dynamic lateral convergence in line direction.

3.2 Landing

Landing is defined as the relative position of each beam with respect to its associated phosphor dot.
Good landing is achieved when each beam excites only its associated colour phosphor dot.
Optimum landing is achieved by adjusting both the purifying magnets and the deflection coil.

APPLICATION NOTES (continued)

3.2.1 Purifying magnets

Purifying magnets are required to compensate for the effects of outside magnetic fields, (including the earth's magnetic field), and manufacturing variations, which could cause mislanding.
Such purifying magnets, designed to provide a magnetic field adjustable in magnitude and direction, effect good landing over the entire screen when the deflection coil position is properly adjusted.

3.2.2 Deflection coil

The position of the deflection centre must be adjustable to make sure that proper landing can be attained in any set. To achieve this the deflection coil should be free to move along the neck over a minimum distance of 12 mm from its most forward position when the purity adjustment is made with the aid of a microscope, or about 20 mm if purity is adjusted by means of the so-called "red ball" method. (See 6.1.2.1.)

4. Drive requirements

To calculate the drive voltages which should be supplied to the tube the following points should be taken into account.

4.1 In presently known systems the luminance signal is composed as follows:
$Y = 0.30R + 0.59G + 0.11B$.
The colour information is carried by two chrominance signals which in the receiver after subcarrier detection, deliver the so-call colour difference signals R-Y, G-Y and B-Y.
These have to be combined with the Y-signal in a matrix circuit to recover the original red, green and blue signals. With the aid of the luminance signal equation it is possible to calculate the maximum voltage ranges for the colour difference signals. The maximum values are reached when the primary colours and their complementaries are produced at maximum brightness.
These values are tabulated below. All values are referred to the maximum value Y=R=G=B=1 for peak white and are considered positive if they cause an increase in beam current.

Colour	R	G	B	Y	R-Y	G-Y	B-Y
Red	1	0	0	0.3	0.7	-0.3	-0.3
Green	0	1	0	0.59	-0.59	0.41	-0.59
Blue	0	0	1	0.11	-0.11	-0.11	0.89
Cyan	0	1	1	0.7	-0.7	0.3	0.3
Magenta	1	0	1	0.41	0.59	-0.41	0.59
Yellow	1	1	0	0.89	0.11	0.11	-0.89

APPLICATION NOTES (continued)

Signal	Minimum	Maximum	Total range
R-Y	-0.7	0.7	1.4
G-Y	-0.41	0.41	0.82
B-Y	-0.89	0.89	1.78

In practice the saturation of the colours is lower than that of the primary colours as considered above, so that the demands on the colour difference signals can be lower than those indicated.

4.2 The combining of the Y-signal with the R-Y, G-Y and B-Y signals can be performed by two methods:

Method 1. Letting the picture tube perform the matrix function by driving the cathodes with the luminance signal while putting the colour difference signals onto the three first grids of the picture tube. (colour difference drive)

Method 2. By means of a separate matrix circuit that delivers red, green and blue signals to the picture tube. (R.G.B. drive). If fed to the three cathodes these signals attain the same maximum amplitudes as the Y-signal in the first method, and it should be remembered that each channel requires full video bandwidth.
In both methods it should be recognized that with cathode drive a higher slope is obtained than with grid drive and to compensate for this higher drive voltages are required for grid drive in each case. For grid drive the relation between grid drive voltage (V_{drg}) and beam current (I_a) is approximately:

$$I_a = k \frac{V_{drg}^3}{V_{cog}^{3/2}}$$

(I_a in μA)
(V_{cog} is cut-off voltage for grid drive)
(k = k factor)

For cathode drive this function reads:

$$I_a = \frac{k\,(1+D)^3}{\left(1 + D\frac{V_{drk}}{V_{cok}}\right)^{3/2}} \cdot \frac{V_{drk}^3}{(V_{cok})^{3/2}}$$

(V_{drk} = cathode drive voltage)
(V_{cok} = cut-off voltage for cathode drive)
(D = penetration factor)

This shows that there is a difference in sensivity between the two drive techniques, and that the relationship between them is not strictly linear. In practice the best result is obtained if the gridsignal amplitudes are made 20% larger than the corresponding cathode signal amplitudes.

4.3 Unequal currents are required for the red, green and blue signals to produce white as the efficiencies of the red, green and blue phosphors are different. (See Equipment Design Values)

4.4 Spread occuring in picture tube properties:
(1) k factor, (2) penetration of g2 (D) and (3) phosphor efficiencies.

APPLICATION NOTES (continued)

(1) The k factor, having a nominal value of 3.0, spreads between 2.6 and 3.1 but it can be derived from the $I_a = f(V_{dr})$ graph for cathode drive that compensation for this spread is attainable when the luminance drive stage is capable of producing approx. 6 volts more than the nominal peak drive needed for the red gun.

(2) The penetration D may spread from 0.18 to 0.40 with a nominal value of 0.29 and is experienced as a spread in V_{co}. It can be offset - if required - by adjustment of V_{g_2} (See page 22).

(3) Phosphor efficiencies: the ratios of cathode currents for white having, for example, CIE x and y coordinates:
x = 0.281 and y = 0.311, may spread as follows:

$\frac{I_R}{I_G}$ = 0.90 with a min. value of 0.65 and a max. value of 1.25

$\frac{I_R}{I_B}$ = 1.00 with a min. value of 0.75 and a max. value of 1.35

In calculations, for the worst case the values $I_R/I_G = 1.25$ and $I_R/I_B = 1.35$ should be used if the compromise white point is chosen (x = 0.281 y = 0.311). If the white point C is chosen for reproduction of colours then for the worst case the current ratio values, $I_R/I_G = 2.00$ and $I_R/I_B = 2.25$ should be used.

5. Raster shape correction

It appears that for 90° deflection the combination of picture tube and deflection coil can give good convergence and landing, but it is not practical to design the combination such that a perfectly rectangular raster is obtained. To avoid the pin cushion raster which results it is necessary to provide raster correction electrically by modulating the deflecting current.

6. Adjustment procedures

The following procedures are suggested to ensure good landing, optimum convergence of the three beams over the entire area of the screen and good grey scale tracking.

Exact focusing is the final operation in the sequence of adjustments, see 6.3. When starting the sequence it is sufficient to adjust the convergence test pattern for optimum sharpness.

Prior to the adjustment procedure the picture tube has to be degaussed. This treatment will correct for localized areas of colour impurity resulting from any magnetization of the shield and internal tube parts and minimize the effect of the earth's magnetic field. Degaussing can be obtained by a coil that consists of 800 turns of 0.7 mm dia. enamelled copper wire (for 220 V_{rms}) and has an outer diameter of approx. 300 mm.
The coil should be moved such that the entire screen is subjected to its field. After about 10 seconds, the coil is moved away from the face plate to a distance of at least 2 m and disconnected from the A.C. power supply.

APPLICATION NOTES (continued)

During manufacture the receiver chassis should be degaussed in a similar manner, with the receiver switched on and care should be taken that the assembly line is properly degaussed. An automatic degaussing system built into the receiver serves for degaussing during normal operation.
It is recommended that the receiver has some adjustments made before the picture tube is built in. These adjustments should include EHT and deflection, and the dynamic convergence in order to facilitate the adjustment of purity and static convergence. Before deflection power and high voltage are applied to the tube, the bias control should be adjusted for maximum bias. After deflection power and high voltage are applied, the beam currents should be increased gradually to minimize the possibility of tube damage in the event of circuit faults. With the application of a test signal, initial adjustment of focus, raster size, linearity and centring should be made.

6.1 Colour purity and convergence procedures

The normal sequence involves, first, static convergence adjustment next the purifying magnet and adjustment of the axial position of the deflection coil, and lastly final adjustment of dynamic convergence.

6.1.1 Static convergence adjustment

A crosshatch pattern is the most suitable signal for convergence adjustments. The pattern should be displayed at moderate brightness to improve the accuracy. It is advisable to converge red and green first, with the blue gun cut off, and then to converge blue into the yellow pattern formed by the coinciding of red and green lines.
The red and green beams are made to converge statically by adjusting the permanent magnets of the radial convergence assembly, or the corresponding D.C. currents. Correct convergence is obtained when the lines in the centre converge to give yellow.
Before the blue lateral convergence magnet is used, the blue lines are brought horizontally adjacent to the yellow lines by means of the radial blue static convergence adjustment (permanent magnet or D.C. current).
Hereafter the blue lines are made to converge with the yellow lines in the centre with the aid of the blue lateral convergence magnet, resulting in white lines in the centre. If necessary this procedure is repeated.

6.1.2 Adjustment for colour purity

Adjustment for colour purity involves two steps:
Adjustment of the purifying magnets. (6.1.2.1)
Adjustment of the position of the deflection coil. (6.1.2.2)
To obtain optimum adjustment, the static and dynamic convergence should be adjusted previously and the picture tube degaussed and well warmed up to normal operating temperature (approx. 30 min, total beam current 600 μA).
Purity assessments are best made on a plain raster.

APPLICATION NOTES (continued)

Adjustment of the purifying magnets influences purity all over the screen. The deflection coil adjustment influences purity mainly at the screen edges. Therefore, the magnets have to be adjusted before the coil.

6.1.2.1 The purifying magnets are adjusted, judging by the landing in the screen centre. There are two ways of doing this.

The first method makes use of a microscope (magnification about 50x). With this method, the deflection coil need not possess more axial adjustment margin than that needed to cope with the spreads of the deflection centres. (12 mm total).

With the microscope, the position of the spot trio's is compared with the position of the phosphor dot trio's at the screen centre. To do this, the three colour rasters are displayed simultaneously, and the phosphor dots are illuminated by means of a light source, shining onto the screen at a small angle. The spot trio's should be made to land on the phosphor dot trio's as shown in Fig.1, with their centre points coinciding.

Due to the beam grouping used in this tube (which improves the overall landing) the spots will then be approx. 25 μm eccentric with respect to their corresponding phosphor dots.

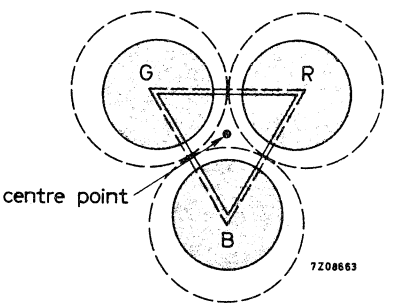

Fig.1. Correct landing in the screen centre.

The second method ("Red ball" method) is applicable if the mounting of the deflection coil is such that it can be drawn away approx. 20 mm backwards from its foremost position when it touches the funnel.

The coil is moved backwards as far as possible, and only the red raster is turned on. (The red gun needs relatively the highest current, thus mislanding on blue and green phosphor dots is seen more clearly so that a sharp indication is obtained).

Now a red area of approx. 10 cm diameter is visible on the screen, surrounded by discoloured and blue and green areas. With the aid of the purifying magnets, the red area is positioned near the screen centre. In order that the above mentioned beam grouping shows to full adventage, the red area should be positioned 20 mm down to the left of the screen centre, see Fig.2.

APPLICATION NOTES (continued)

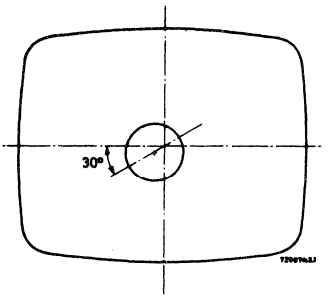

Fig.2

6.1.2.2 After adjustment of the purifying magnets, the deflection coil is adjusted by shifting it axially until optimum landing over the entire screen is reached. This can be done in two stages:

1. Only the red raster turned on, and the coil position giving an overall pure red raster sought.
2. For the final adjustment, a white raster is displayed and, if necessary, very slight adjustment of the deflection coil position made to obtain the best white uniformity.

After having completed 1 and 2, the red, green and blue rasters are checked separately for their purity, and if necessary the procedure repeated.

6.1.3 Adjustment of dynamic convergence

Just as for the static convergence a crosshatch pattern is recommended, displayed at low brightness.
It is advisable to adjust first the convergence in the vertical direction (with frame frequency) and then the horizontal convergence (with currents of line frequency). During the dynamic convergence adjustments, the static convergence (6.1.1) may need readjustment depending on the efficiency of any clamping circuits used.

A favourable sequence is to adjust the red and green convergence controls first so that both rasters coincide to display yellow lines while the blue gun is kept cut-off. Thereafter the blue pattern is added and adjusted to coincide with the yellow to give a white pattern. However, as the blue horizontal convergence system usually has a significant power consumption which influences the line time base to some degree, it is often advisable to start the whole convergence procedure by adjusting the blue horizontal convergence controls coarsely to give a straight blue horizontal centre line.

During the vertical dynamic convergence adjustment, the vertical axis of the screen should be taken as reference, while the horizontal adjustments should be referred to the horizontal axis. During the latter sequence the lateral blue dynamic convergence is also adjusted.

APPLICATION NOTES (continued)

The currents for dynamic convergence (except blue lateral) consist of two components, viz. one of parabolic and one of sawtooth wave form. Usually both have their own controls which have to be adjusted in combination to obtain convergence. The parabolic ("amplitude") controls are used to make the configurations at the extremities of the picture axis equal to that at the centre. With the sawtooth ("phase" or "tilt") control the two extremities of the picture axis are made equal to each other as far as possible.
In addition, the blue horizontal convergence needs an extra waveform correction to correct for the tilting of the outer edges.
The blue lateral waveform needed is basically a sawtooth. Left-to-right asymmetry can be adjusted by slight rotation of the radial convergence assembly.

By repeated adjustments of the controls the line patterns in the various colours ultimately coincide and become parallel to each other. Thereafter these are made to coincide with the aid of the static convergence magnets to white lines.

After convergence onto the axes is obtained, usually some errors in the corners of the picture remain. Slight readjustment may be needed to minimize these errors.

At the end of the procedure purity is checked, and readjusted if needed, with the aid of the purifying magnets.

6.2 Adjustment of grey scale

This adjustment is carried out last of all and the sequence of the manipulations depends on receiver circuitry.

To obtain a constant hue of white over the whole grey scale when displaying a monochrome signal, the three guns must track accurately. This can be achieved by adjusting two points of each gun characteristic, one near cut-off and one near the highlights. To this end the following variables are available, and in a receiver two of them must be made adjustable for each gun:
1. cut-off point (V_{g_1})
2. slope (V_{g_2})
3. drive

The proper adjustment procedure depends on receiver circuitry. After adjustment, the brightness and contrast controls should not cause any change in hue, and the chosen white point should be displayed.

6.3 Focusing

The focusing voltage for all three guns can be adjusted via the common focus base pin No.9. In order to obtain optimum focus it is recommended to use a black-and-white picture with a low peak to mean brightness ratio, such as the RMA test picture, running at a total mean current of about 1 mA (peak currents in the three guns in the order of 2.5 mA), and to focus at the highlights. This procedure will give best overall focus.

Brightness at the centre of the screen as a function of I_{total} for white CIE coordinates
x = 0.310, y = 0.316 [3]

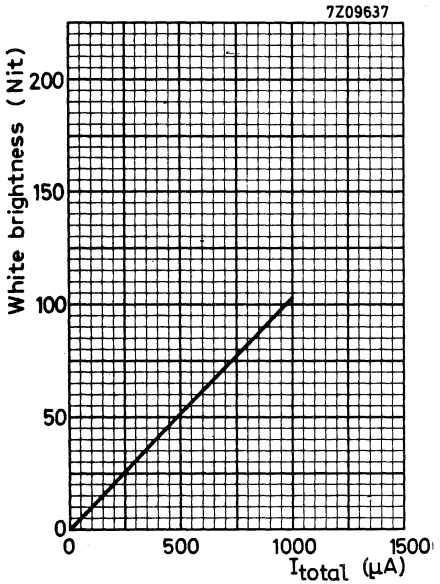

Brightness at the centre of the screen as a function of I_{total} for white CIE coordinates
x = 0.265, y = 0.290 [4]

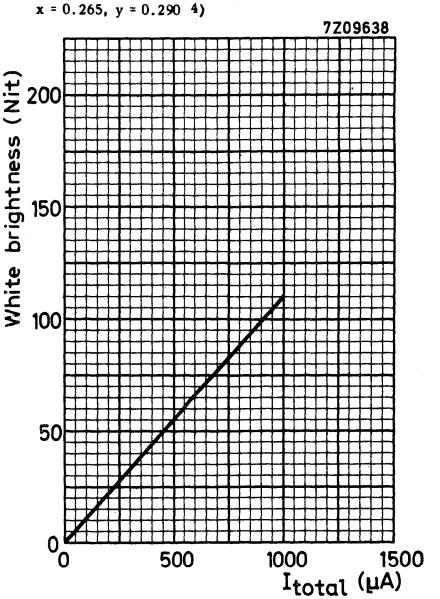

Brightness at the centre of the screen as a function of I_{total} for white CIE coordinates
x = 0.281, y = 0.311 [5]

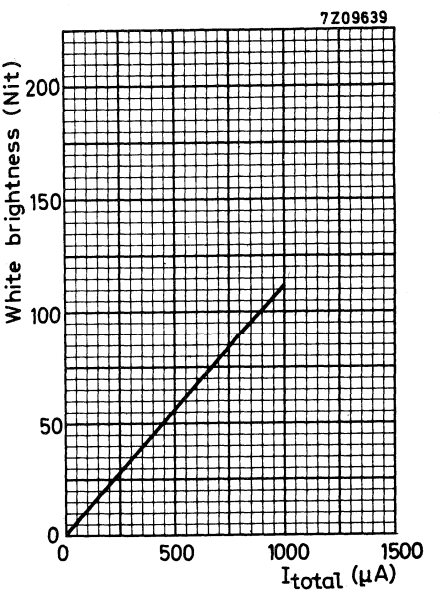

Scanned area 504 mm x 396 mm

[3][4][5] See page 8.

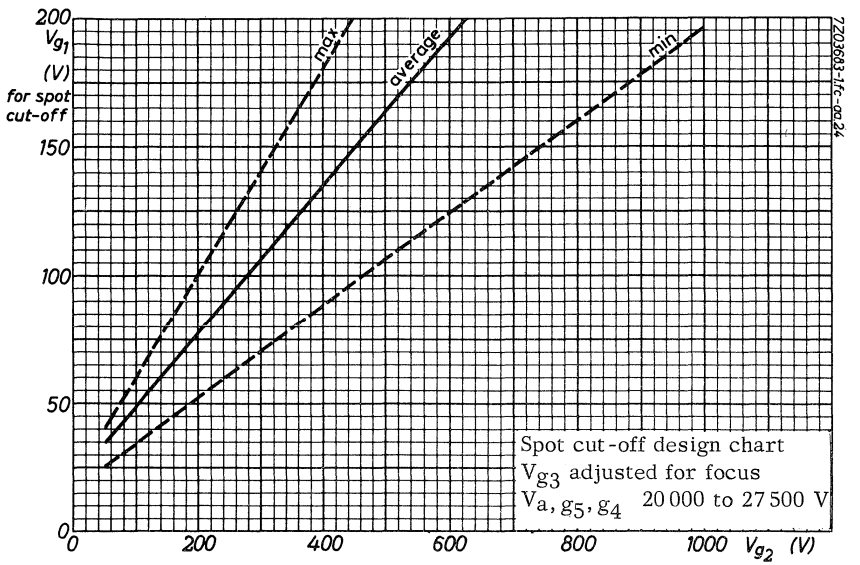
200
V_{g_1}
(V)
for spot
cut-off
150
100
50
0
0
200
400
600
800
1000
V_{g_2} (V)
max
average
min
7Z03683-1.fc-aa.24
Spot cut-off design chart
V_{g_3} adjusted for focus
V_{a, g_5, g_4} 20 000 to 27 500 V

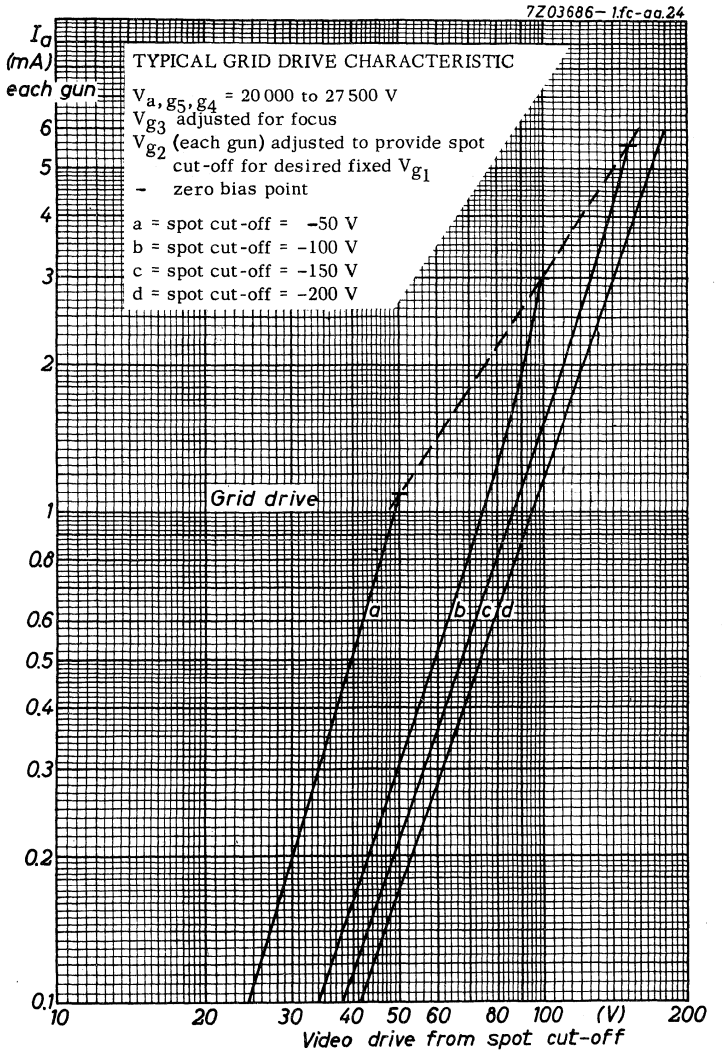
7Z03686-1.fc-aa.24
I_a (mA) each gun
TYPICAL GRID DRIVE CHARACTERISTIC
V_{a,g_5,g_4} = 20 000 to 27 500 V
V_{g_3} adjusted for focus
V_{g_2} (each gun) adjusted to provide spot cut-off for desired fixed V_{g_1}
– zero bias point
a = spot cut-off = –50 V
b = spot cut-off = –100 V
c = spot cut-off = –150 V
d = spot cut-off = –200 V
Grid drive
a
b c d
6
5
4
3
2
1
0.8
0.6
0.5
0.4
0.3
0.2
0.1
10
20
30
40
50
60
80
100
(V)
200
Video drive from spot cut-off

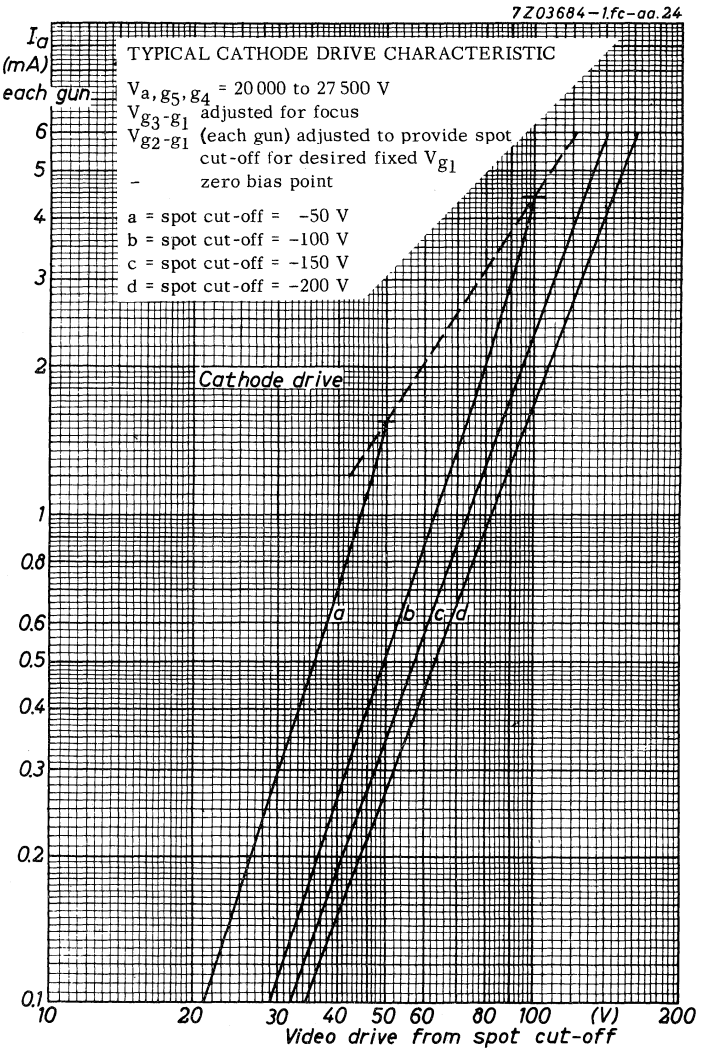
7Z03684-1.fc-aa.24
TYPICAL CATHODE DRIVE CHARACTERISTIC
Va, g5, g4 = 20 000 to 27 500 V
Vg3-g1 adjusted for focus
Vg2-g1 (each gun) adjusted to provide spot cut-off for desired fixed Vg1
– zero bias point
a = spot cut-off = −50 V
b = spot cut-off = −100 V
c = spot cut-off = −150 V
d = spot cut-off = −200 V
Ia (mA) each gun
Cathode drive
a
b
c
d
6
5
4
3
2
1
0.8
0.6
0.5
0.4
0.3
0.2
0.1
10
20
30
40
50
60
80
100
(V)
200
Video drive from spot cut-off

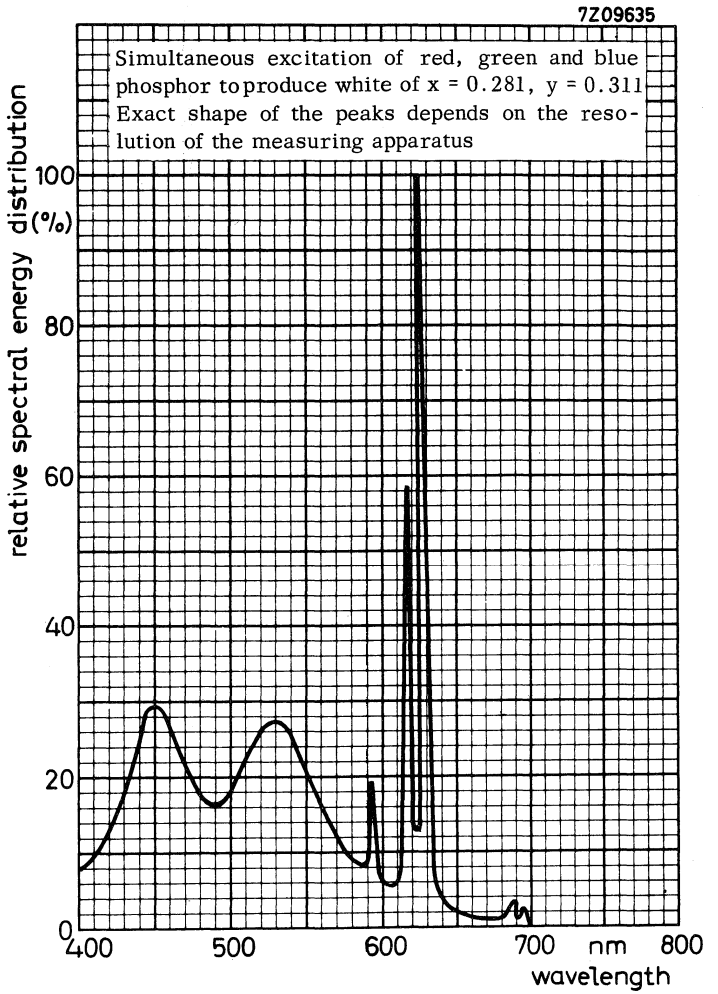

Colour coordinates

	x	y
red	0.630	0.340
green	0.315	0.600
blue	0.150	0.060

90° RECTANGULAR COLOUR TELEVISION PICTURE TUBE WITH INTEGRAL PROTECTION

Three-gun temperature-compensated shadow-mask rectangular colour television tube with electrostatic focus, magnetic deflection and convergence, metal-backed three-colour phosphor dot screen. A high white brightness is obtained by the use of improved red, green and blue phosphors at near unity current ratio. Temperature compensating the shadow-mask has led to optimum field purity and good uniformity during warm-up. Minimum occurrence of the moiré effect is ensured by optimizing the mask for the reproduction of 625-line pictures. The tube has a reinforced envelope and therefore no separate safety screen is necessary. The rimband leaves the edge of the faceplate free.

QUICK REFERENCE DATA	
TEMPERATURE-COMPENSATED SHADOW-MASK	
SHADOW-MASK OPTIMIZED FOR 625-LINE SYSTEM	
HIGH WHITE BRIGHTNESS AT UNITY CURRENT RATIO	
Face diagonal	63 cm
Deflection angle	90 o
Neck length	164.2 mm
Envelope	reinforced
Focusing	electrostatic
Deflection	magnetic
Convergence	magnetic
Heating	6.3 V, 900 mA
Light transmission of face glass	52.5 %

SCREEN

Metal-backed tricolour phosphor dots

Phosphor type	Red: Europium activated rare earth Green and blue: sulphide type		
Dot arrangement	Triangular		
Spacing between centres of adjacent dot trios		0.81	mm
Light transmission at centre of face glass		52.5	%

HEATING

Indirect by A.C. or D.C.; parallel or series supply

Heater voltage	V_f	6.3	V
Heater current	I_f	900	mA

For maximum cathode life it is recommended that the heater supply be regulated at 6.3 V. If the tube is connected in a series heater chain the surge heater voltage must not exceed 9.5 V_{rms} when the supply is switched on.

CAPACITANCES

Final accelerator to external conductive coating	$C_{ag_5g_4/m}$	max. min.	2500 2000	pF pF
Final accelerator to metal rimband	$C_{ag_5g_4/m'}$		500	pF
Grid No.1 of any gun to all other electrodes	C_{g_1}		7	pF
Cathodes of all guns (connected in parallel) to all other electrodes	C_k		15	pF
Cathode of any gun to all other electrodes	C_{k_R} C_{k_G} C_{k_B}		5 5 5	pF pF pF
Grid No.3 (focusing electrode) to all other electrodes	C_{g_3}		7	pF

FOCUSING electrostatic

DEFLECTION magnetic

Diagonal deflection angle	90°
Horizontal deflection angle	79°
Vertical deflection angle	62°

CONVERGENCE magnetic

MECHANICAL DATA

Overall length			521 ± 9.5	mm
Neck length			164.2 ± 4.5	mm
Diagonal	of bulb	max.	626	mm
Horizontal axis	of bulb	max.	548.1	mm
Vertical axis	of bulb	max.	440.5	mm
Useful screen diagonal		min.	584	mm
horizontal axis		min.	504	mm
vertical axis		min.	396	mm

Mounting position: any

Net weight: approx. 188N (18.8 kg)

Base: 12 pin base JEDEC B12-246

Anode contact: Small cavity contact J1-21, IEC 67-III-2.

Magnetic shielding

Magnetic shielding should be provided by means of a metal shield extending 28 cm over the cone of the tube measured from the centre of the face plate. The metal shell is preferably constructed of min. 0.5 mm cold rolled steel properly annealed. The air gap between the shield and the metal rimband should be as small as possible and not exceed 10 mm. The magnetic shield should be connected to the outer conductive coating.

NOTES TO OUTLINE DRAWING (See pages 4 and 5)

1. Reference line, determined by the plane of the upper edge of the flange of the reference line gauge, when the gauge is resting on the cone. Gauge see page 10.
2. The socket for this base should not be rigidly mounted; it should have flexible leads and be allowed to move freely. Bottom circumference of base will fall within a circle concentric with bulb axis and having a diameter of 55 mm.
3. Configuration of outer conductive coating may be different, but will contain the contact area as shown in the drawing.
4. To clean this area, whipe only with a soft dry lintless cloth.
5. The displacement of any lug with respect to the plane through the three other lugs is max. 2 mm.
6. Minimum space to be reserved for mounting lug.
7. The position of the mounting screw in the cabinet must be within a circle of 9.5 mm diameter drawn around the true geometrical positions, i.e. the corners of a rectangle of 517 mm x 411 mm.
8. Coördinates for radius R = 30 mm : x = 213.66 mm, y = 151.63 mm.

MECHANICAL DATA

Dimensions in mm

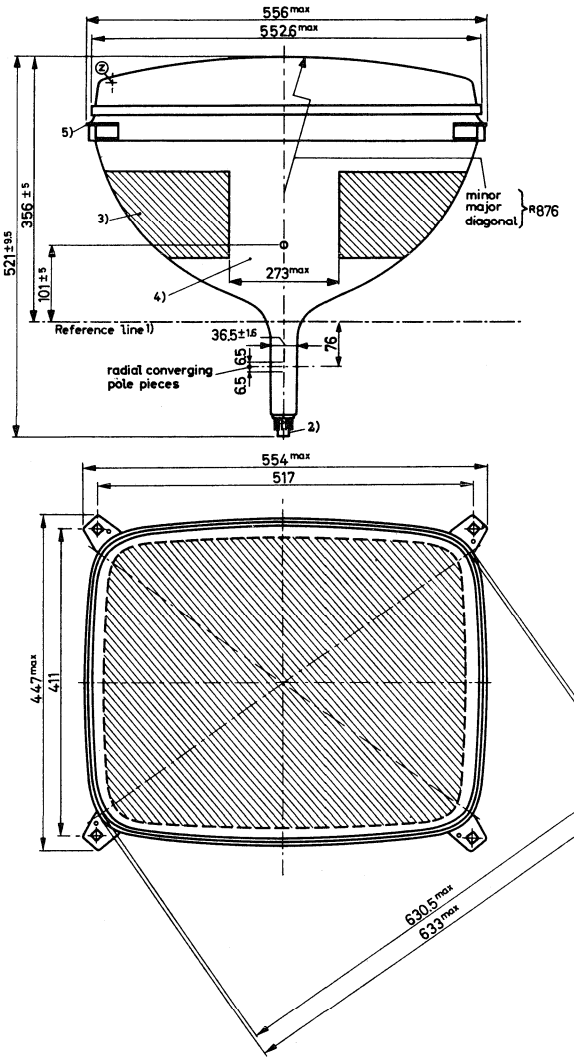

Notes see page 3

MECHANICAL DATA (continued)

Dimensions in mm

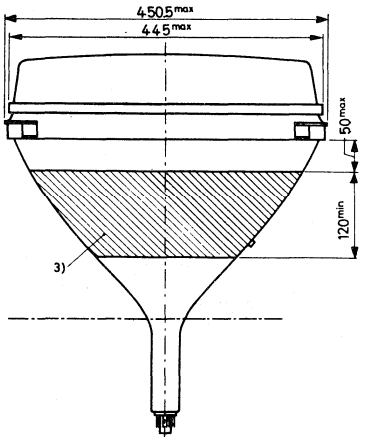

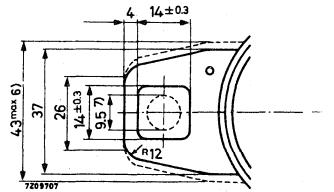

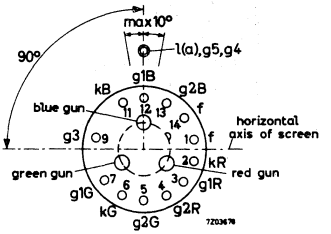

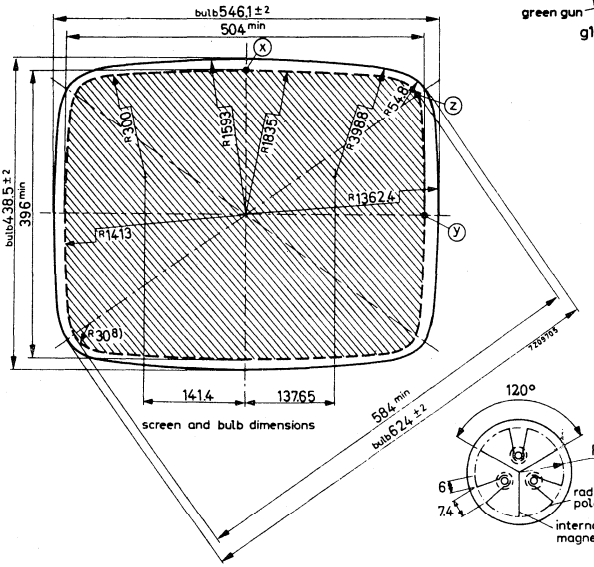

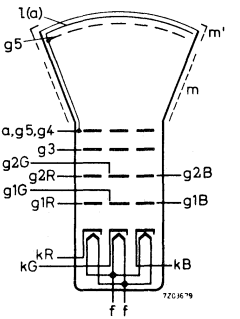

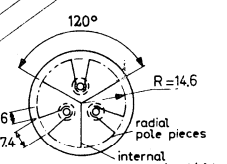

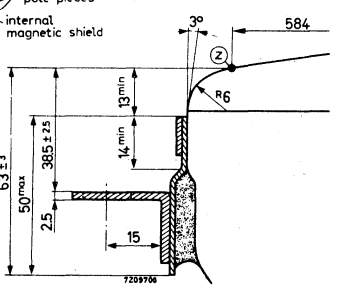

Notes see page 3

MAXIMUM CONE CONTOUR DRAWING

Dimensions in mm

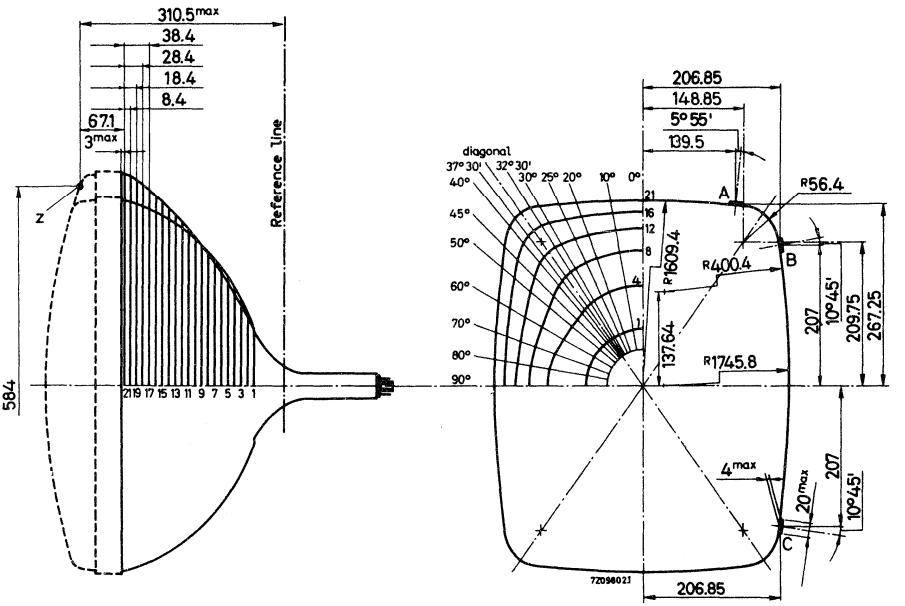

Section	Nom. distance from point Z	Distance from centre (max. values)														
		Long axis 0°	10°	20°	25°	30°	32°30'	35°21'38" Diag.	37°30'	40°	45°	50°	60°	70°	80°	Short axis 90°
1	265.5	82.5	82.6	83.0	83.0	83.0	83.0	83.0	83.0	83.0	83.3	83.5	83.5	83.0	82.8	82.8
2	255.5	107.6	107.4	106.7	106.1	105.7	105.5	105.2	105.1	105.0	104.7	104.5	106.3	111.0	115.0	115.5
3	245.5	129.3	129.5	128.0	127.3	126.6	125.8	124.8	124.0	123.2	122.2	121.4	122.5	126.9	129.9	130.2
4	235.5	147.4	147.2	146.0	145.0	144.8	144.2	142.6	141.2	139.6	137.2	135.4	134.7	138.0	140.0	140.0
5	225.5	162.8	162.8	161.6	160.7	160.3	159.4	157.7	156.2	154.3	150.4	147.7	145.0	146.4	148.2	148.0
6	215.5	176.3	176.3	175.4	175.0	174.3	173.5	171.6	169.9	167.9	163.1	159.0	154.4	154.0	155.4	155.3
7	205.5	188.2	188.2	187.8	187.6	187.2	186.6	185.2	183.4	181.1	175.4	169.9	163.5	161.2	161.6	161.5
8	195.5	198.8	199.0	199.2	199.4	199.6	199.1	197.8	196.1	193.4	186.9	180.3	171.9	170.0	167.4	167.2
9	185.5	208.2	208.8	209.6	210.3	211.1	210.9	209.7	207.8	205.3	197.9	190.3	179.7	174.4	172.9	172.7
10	175.5	216.9	217.9	219.2	220.5	222.2	222.2	221.3	218.9	216.1	208.0	199.4	187.2	180.8	178.2	178.1
11	165.5	224.7	225.6	227.7	229.7	231.9	232.2	231.6	229.6	226.4	217.5	208.0	194.4	186.9	183.5	182.9
12	155.5	231.9	232.9	235.9	238.5	241.4	242.1	241.9	240.1	237.0	226.9	216.4	201.5	191.5	188.6	187.7
13	145.5	238.2	239.7	243.6	246.8	250.5	251.7	251.9	250.4	247.0	236.0	224.5	208.3	198.0	193.4	192.3
14	135.5	244.4	246.3	251.0	254.9	259.5	261.3	261.8	260.5	257.1	245.3	232.6	214.8	203.4	198.2	196.8
15	125.5	250.3	252.2	258.0	262.3	268.1	270.5	271.3	270.1	266.3	254.0	240.4	220.9	208.5	202.4	200.3
16	115.5	256.1	258.2	264.9	270.0	276.6	279.6	280.7	279.3	275.4	262.4	247.8	226.8	213.7	206.6	204.1
17	105.5	260.0	263.4	270.8	276.8	284.7	287.9	289.3	287.9	283.9	270.0	254.7	232.3	218.5	210.5	207.7
18	95.5	265.6	268.3	276.4	283.3	292.4	295.7	297.6	296.3	292.1	277.0	261.0	237.6	223.1	214.3	211.2
19	85.5	269.4	272.4	281.5	289.4	299.4	302.9	305.2	304.2	299.6	283.8	267.1	242.6	227.2	217.9	214.7
20	75.5	272.3	275.5	286.0	294.0	304.6	309.4	311.1	310.5	305.9	289.8	272.5	247.0	230.6	221.2	218.0
21	67.1	273.3	276.79	287.64	296.17	307.1	311.8	313.6	312.6	308.79	292.55	275.38	248.85	232.15	222.91	219.95

TYPICAL OPERATING CONDITIONS

Final accelerator voltage	V_{a,g_5,g_4}	25	kV
Grid No.3 (focusing electrode) voltage	V_{g_3}	4.2 to 5	kV
Grid No.2 voltage for a spot cut-off voltage V_{g_1} = −105 V	V_{g_2}	210 to 495	V [1]
Grid No.1 voltage for spot cut-off at V_{g_2} = 300 V	V_{g_1}	−70 to −140	V [2]
Brightness at the centre of the screen		See page 21	

EQUIPMENT DESIGN VALUES (each gun if applicable)

Valid for final accelerator voltages between 20 kV and 27.5 kV.

Grid No.3 (focusing electrode) voltage	V_{g_3}	16.8 to 20	% of final accelerator voltage
Grid No.2 voltage [1]	V_{g_2}	See cut-off design chart page 22	
Grid No.1 voltage for visual extinction of focused spot (cut-off voltage) [2]	V_{g_1}	See cut-off design chart page 22	
Difference in cut-off voltages between guns in any tube	ΔV_{g_1}	lowest value is min. 65% of highest value	
Grid No.3 (focusing electrode) current	I_{g_3}	−15 to +15	μA
Grid No.2 current	I_{g_2}	−5 to +5	μA
Grid No.1 current at V_{g_1} = −150 V	I_{g_1}	−5 to +5	μA

To produce white of the following CIE coördinates		3)	4)	5)	
	x	0.310	0.265	0.281	
	y	0.316	0.290	0.311	
Percentage of total anode current supplied by each gun (typical)					
red gun		43.5	27.9	32.2	%
green gun		30.0	34.9	35.6	%
blue gun		26.5	37.2	32.2	%
Ratio of anode currents red gun to green gun	min.	1.05	0.60	0.65	
	av.	1.45	0.80	0.90	
	max.	2.00	1.10	1.25	
Ratio of anode currents red gun to blue gun	min.	1.20	0.55	0.75	
	av.	1.65	0.75	1.00	
	max.	2.25	1.05	1.35	

Notes see page 8

EQUIPMENT DESIGN VALUES (continued)

Required centring, measured at the centre of the screen in any direction	max.	15	mm
Correction which must be supplied by purifying magnet to compensate for mis-register (including that caused by earth's magnetic field) when using recommended components. Measured at the centre of the screen in any direction	max.	130	μm
Lateral distance between the blue spot and the converged red and green spots	max. (in both directions)	6.5	mm
Radial convergence displacement excluding effects of dynamic convergence (each beam)	max. (in both directions)	9.5	mm [6]

1) This range of V_{g_2} has to be used when in circuit design fixed values for cut-off of the three guns are used.

2) This range of V_{g_1} has to be used when in circuit design fixed values for V_{g_2} of the three guns are used.

3) To produce colour pictures with the best possible quality, this white point should be used as the transmission systems are based on this point. (Point C).

4) To produce black/white pictures a more bluish white point would be preferable. This white point corresponds virtually with the white point of current black/white picture tubes.

5) This point is a compromise between the white point C and the white point x = 0.265 and y = 0.290, given in order to enable good rendition of colour and black-and-white pictures with one white point.

6) Dynamic convergence to be effected by currents of approximately parabolic wave-shape synchronized with scanning.

LIMITING VALUES (Each gun if applicable) (Design centre rating system unless otherwise specified)

Final accelerator voltage	V_{a,g_5,g_4}	max.	27.5	kV [1)2)3)]
		min.	20	kV [1)4)]
Average current for 3 guns	I_a	max.	1000	μA [5)]
Grid No.3 (focusing electrode) voltage	V_{g_3}	max.	6000	V
Grid No.2 voltage, peak, including video signal voltage	$V_{g_{2p}}$	max.	1000	V
Grid No.1 voltage,				
negative	$-V_{g_1}$	max.	400	V
negative, operating cut-off	$-V_{g_1}$	max.	200	V
positive	V_{g_1}	max.	0	V
positive peak	$V_{g_{1p}}$	max.	2	V
Cathode to heater voltage,				
positive	V_{kf}	max.	250	V [6)7)]
positive peak	V_{kf_p}	max.	300	V
negative	$-V_{kf}$	max.	135	V
negative peak	$-V_{kf_p}$	max.	180	V

1) Absolute maximum rating system.

2) The X-ray dose rate remains below the acceptable value of 0.5 mr/h, measured with ionisation chambre when the tube is used within its limiting values.

3) For optimal operating conditions the final accelerator voltage has to be stabilized. Therefore its absolute maximum value can be approached in actual operation and for this reason this value is given instead of the design centre value. During adjustment on the production line this value is likely to be surpassed considerably. It is therefore strongly recommended to first make the necessary adjustments for normal operation without picture tube.

4) Operation of the tube at lower voltages impairs brightness and resolution and may have a detrimental effect on colour purity.

5) 1500μA permitted provided a current limiting circuit is used.

6) In order to avoid excessive hum the a.c. component of the heater to chassis voltage should be as low as possible and must not exceed 20 V_{RMS}.

7) During an equipment warm-up period not exceeding 15 s $V_{k/f}$ is allowed to rise to 410 V. Between 15 s and 45 s after switching on a decrease in $V_{k/f}$ proportional with time from 410 V to 250 V is permissible.

REMARK

With the high voltage used with this tube (max. 27.5 kV) internal flash-overs may occur. These may destroy the cathode(s) of the tube. Therefore it is necessary to provide **protective circuits, using spark gaps**.
The spark gaps must be connected as follows:

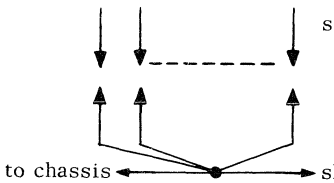

No other connections between the outer conductive coating and the chassis are permissible.
Additional information available on request.

REFERENCE LINE GAUGE Dimensions in mm

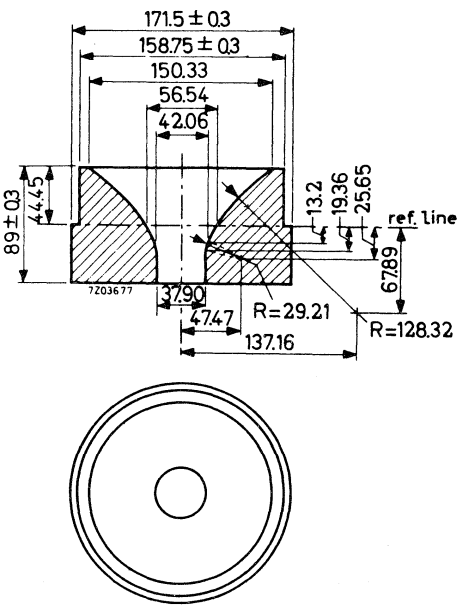

DESCRIPTION OF THE TUBE

The A63-120X is a rectangular temperature compensated shadow-mask colour picture tube for use in colour television receivers. The tube can display a picture, either in full colour or in black and white measuring 504 mm x 396 mm minimum (projected area of 1905 cm^2).

The A63-120X has

- a deflection angle of 90°
- a neck diameter of 36.5 mm
- a three-colour phosphor dot screen, composed of closely spaced dots in a regular pattern of tri-angular groups, each containing a red, a green and a blue light emitting dot.
- Three electron guns with axes tilted towards the screen centre, with electrostatic focusing systems and mounted side by side in the neck of the tube 120° apart.

Colour selection is effected by a metal graded-hole shadow mask positioned in front of the tricolour phosphor-dot screen. This mask is aligned with the dot pattern so that the electron beam from each gun lands only on phosphor dots of the associated colour.

The shadow mask has graded holes that increase gradually in diameter from the edge of the mask towards the centre. Grading enables correct purity to be achieved over the whole screen with minimum adjustment.

Although the three guns are tilted towards the screen centre so that their axes intersect at the shadow mask, lateral and radial convergence are necessary to ensure correct convergence over the entire screen. Each of the three guns is therefore provided with a pair of radial converging pole pieces.

Radial convergence can be achieved by means of magnets and coils mounted externally on the neck of the tube. The magnetic flux provided is coupled through the glass neck of the tube to associated internal pole pieces. The shape of the pole pieces, together with the internal magnetic shielding, is shown in Fig.1. Internal shielding prevents interaction of the various magnetic fields.

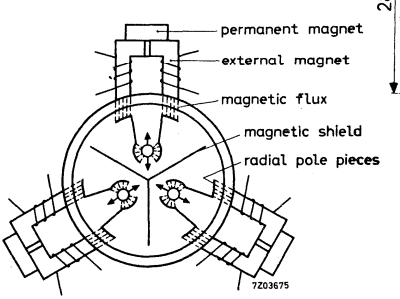

Fig.1

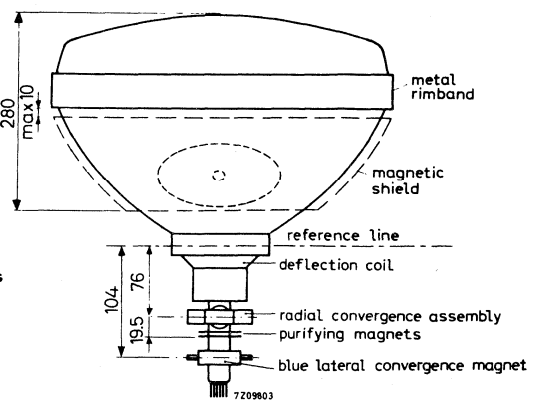

Fig.2

Fig.2 shows the position of the components on the neck of the tube.
Lateral convergence is achieved by a separate assembly mounted on the neck of the tube. This assembly causes horizontal movement of the blue beam, and simultaneously, movements of the red and green beams in the opposite direction.
Facilities for dynamic blue lateral convergence are also provided in this convergence assembly.

APPLICATION NOTES

1. Magnetic shielding

The tube should be fitted with a magnetic shield around the cone, to minimize the effects of external magnetic fields, including the horizontal, vertical and axial components of the earth's magnetic field. The latter so influences the colour purity that compensation by means of the purifying magnets is not possible.
The metal shield should preferably be constructed of coldrolled steel, at least 0.5 mm thick and properly annealed at 850 °C. Since the tube re-inforcing band is an essential part of the magnetic circuit used for degaussing, the air gap between the band and the shield should be as small as possible and certainly not more than 10 mm. To be effective, the shield must be degaussed as described under "Adjustment procedures". Building-in of an automatic degaussing system is advised.

2. Centring of raster on the screen.

Raster centring in a shadow-mask colour picture tube is achieved by passing direct current of the required value through each pair of deflection coils. The values for raster displacement given in the data apply when all components are properly adjusted.

3. Component considerations.

The necessary components are the deflection coil, the radial convergence assembly, the purifying magnets and the blue lateral convergence magnet.
Basically the functions of the components are:
- deflection of the three beams over the entire screen: deflection coil.
- good convergence of the three beams over the screen: radial convergence assembly and blue lateral convergence magnet.
- landing adjustment: purifying magnets and deflection coil

The mounting positions of the components are as follows:

The deflection coil: in such a way that its deflection centre coincides with the one used in the screen-laying process during manufacturing. The coil must therefore be designed so that sufficient movement in the axial direction is possible.

The radial convergence assembly: with its pole pieces centred above the convergence pole pieces inside the tube. Initially, the assembly should be mounted upright. Small rotations of the whole assembly influence the convergence and can be used during adjustment of the blue lateral correction to obtain optimum lateral convergence.

APPLICATION NOTES (continued)

The purifying magnets: over the gap between the electrode g3 and g4 of the gun, or still closer to the deflection coil. Placing the purifying magnets closer to the base results in poorer performance as the spot quality is adversely affected.

The blue lateral convergence magnet: as near as possible to the rear side of the purifying magnets but not shifted backwards more than halfway along electrode g3 of the gun.

3.1 Convergence

Static convergence, i.e. convergence of the three beams onto the centre of the screen, is usually accomplished with permanent magnets which are part of the radial convergence assembly, or with D.C. currents through the convergence coils in combinations with the lateral converging magnet.
The strength of the magnetic field that is adjustably coupled to the radial convergence pole pieces of the gun should be such that each beam can be moved 9.5 mm in both directions towards the centre of the screen excluding effects of dynamic convergence. The static blue lateral convergence magnet should provide a magnetic field adjustable in magnitude and polarity.
This field exerts a directive force on the blue beam and simultaneously a force in the opposite direction on the green and the red beams.
The displacement of the blue beam opposite to the movement of the red and green beams should be 6.5 mm in both directions.
With these four adjustable magnetic fields static convergence of the three beams can be attained.
For good convergence over the entire screen dynamic radial convergence is required together with a small amount of dynamic lateral convergence in line direction.
The radial convergence assembly consists fundamentally of three cores with associated windings. Through the windings are passed the necessary currents for maintaining convergence when the beams are deflected over the screen.
The required form of the currents can be obtained by adding a current with a sawtooth wave form to one with a parabolic wave form. Two separate windings are required for correction in the horizontal and the vertical direction. The parabolic and sawtooth currents should be adjustable in amplitude and the sawtooth currents and the vertical blue parabola should, in addition be adjustable in polarity.
The blue lateral convergence magnet consists of a core and associated windings to obtain dynamic lateral convergence in line direction.

3.2 Landing

Landing is defined as the relative position of each beam with respect to its associated phosphor dot.
Good landing is achieved when each beam excites only its associated colour phosphor dot.
Optimum landing is achieved by adjusting both the purifying magnets and the deflection coil.

APPLICATION NOTES (continued)

3.2.1 Purifying magnets

Purifying magnets are required to compensate for the effects of outside magnetic fields, (including the earth's magnetic field), and manufacturing variations, which could cause mislanding.
Such purifying magnets, designed to provide a magnetic field adjustable in magnitude and direction, effect good landing over the entire screen when the deflection coil position is properly adjusted.

3.2.2 Deflection coil

The position of the deflection centre must be adjustable to make sure that proper landing can be attained in any set. To achieve this the deflection coil should be free to move along the neck over a minimum distance of 12 mm from its most forward position when the purity adjustment is made with the aid of a microscope, or about 20 mm if purity is adjusted by means of the so-called "red ball" method. (See 6.1.2.1.)

4. Drive requirements

To calculate the drive voltages which should be supplied to the tube the following points should be taken into account.

4.1 In presently known systems the luminance signal is composed as follows:
$Y = 0.30R + 0.59G + 0.11B$.
The colour information is carried by two chrominance signals which in the receiver after subcarrier detection, deliver the so-call colour difference signals R-Y, G-Y and B-Y.
These have to be combined with the Y-signal in a matrix circuit to recover the original red, green and blue signals. With the aid of the luminance signal equation it is possible to calculate the maximum voltage ranges for the colour difference signals. The maximum values are reached when the primary colours and their complementaries are produced at maximum brightness.
These values are tabulated below. All values are referred to the maximum value Y=R=G=B=1 for peak white and are considered positive if they cause an increase in beam current.

Colour	R	G	B	Y	R-Y	G-Y	B-Y
Red	1	0	0	0.3	0.7	-0.3	-0.3
Green	0	1	0	0.59	-0.59	0.41	-0.59
Blue	0	0	1	0.11	-0.11	-0.11	0.89
Cyan	0	1	1	0.7	-0.7	0.3	0.3
Magenta	1	0	1	0.41	0.59	-0.41	0.59
Yellow	1	1	0	0.89	0.11	0.11	-0.89

APPLICATION NOTES (continued)

Signal	Minimum	Maximum	Total range
R-Y	-0.7	0.7	1.4
G-Y	-0.41	0.41	0.82
B-Y	-0.89	0.89	1.78

In practice the saturation of the colours is lower than that of the primary colours as considered above, so that the demands on the colour difference signals can be lower than those indicated.

4.2 The combining of the Y-signal with the R-Y, G-Y and B-Y signals can be performed by two methods:

Method 1. Letting the picture tube perform the matrix function by driving the cathodes with the luminance signal while putting the colour difference signals onto the three first grids of the picture tube. (colour difference drive)

Method 2. By means of a separate matrix circuit that delivers red, green and blue signals to the picture tube. (R.G.B. drive). If fed to the three cathodes these signals attain the same maximum amplitudes as the Y-signal in the first method, and it should be remembered that each channel requires full video bandwidth.
In both methods it should be recognized that with cathode drive a higher slope is obtained than with grid drive and to compensate for this higher drive voltages are required for grid drive in each case. For grid drive the relation between grid drive voltage (V_{drg}) and beam current (I_a) is approximately:

$$I_a = k \frac{V_{drg}^3}{V_{cog}^{3/2}}$$

(I_a in μA)
(V_{cog} is cut-off voltage for grid drive)
(k = k factor)

For cathode drive this function reads:

$$I_a = \frac{k\,(1+D)^3}{\left(1 + D\frac{V_{drk}}{V_{cok}}\right)^{3/2}} \cdot \frac{V_{drk}^3}{(V_{cok})^{3/2}}$$

(V_{drk} = cathode drive voltage)
(V_{cok} = cut-off voltage for cathode drive)
(D = penetration factor)

This shows that there is a difference in sensivity between the two drive techniques, and that the relationship between them is not strictly linear. In practice the best result is obtained if the gridsignal amplitudes are made 20% larger than the corresponding cathode signal amplitudes.

4.3 Unequal currents are required for the red, green and blue signals to produce white as the efficiencies of the red, green and blue phosphors are different. (See Equipment Design Values)

4.4 Spread occuring in picture tube properties:
(1) k factor, (2) penetration of g2 (D) and (3) phosphor efficiencies.

APPLICATION NOTES (continued)

(1) The k factor, having a nominal value of 3.0, spreads between 2.6 and 3.1 but it can be derived from the $I_a = f(V_{dr})$ graph for cathode drive that compensation for this spread is attainable when the luminance drive stage is capable of producing approx. 6 volts more than the nominal peak drive needed for the red gun.

(2) The penetration D may spread from 0.18 to 0.40 with a nominal value of 0.29 and is experienced as a spread in V_{co}. It can be offset - if required - by adjustment of V_{g_2} (See page 22).

(3) Phosphor efficiencies: the ratios of cathode currents for white having, for example, CIE x and y coordinates:
x = 0.281 and y = 0.311, may spread as follows:

$\frac{I_R}{I_G}$ = 0.90 with a min. value of 0.65 and a max. value of 1.25

$\frac{I_R}{I_B}$ = 1.00 with a min. value of 0.75 and a max. value of 1.35

In calculations, for the worst case the values $I_R/I_G = 1.25$ and $I_R/I_B = 1.35$ should be used if the compromise white point is chosen (x = 0.281 y = 0.311). If the white point C is chosen for reproduction of colours then for the worst case the current ratio values, $I_R/I_G = 2.00$ and $I_R/I_B = 2.25$ should be used.

5. Raster shape correction

It appears that for 90° deflection the combination of picture tube and deflection coil can give good convergence and landing, but it is not practical to design the combination such that a perfectly rectangular raster is obtained. To avoid the pin cushion raster which results it is necessary to provide raster correction electrically by modulating the deflecting current.

6. Adjustment procedures

The following procedures are suggested to ensure good landing, optimum convergence of the three beams over the entire area of the screen and good grey scale tracking.

Exact focusing is the final operation in the sequence of adjustments, see 6.3. When starting the sequence it is sufficient to adjust the convergence test pattern for optimum sharpness.

Prior to the adjustment procedure the picture tube has to be degaussed. This treatment will correct for localized areas of colour impurity resulting from any magnetization of the shield and internal tube parts and minimize the effect of the earth's magnetic field. Degaussing can be obtained by a coil that consists of 800 turns of 0.7 mm dia. enamelled copper wire (for 220 V_{rms}) and has an outer diameter of approx. 300 mm.
The coil should be moved such that the entire screen is subjected to its field. After about 10 seconds, the coil is moved away from the face plate to a distance of at least 2 m and disconnected from the A.C. power supply.

APPLICATION NOTES (continued)

During manufacture the receiver chassis should be degaussed in a similar manner, with the receiver switched on and care should be taken that the assembly line is properly degaussed. An automatic degaussing system built into the receiver serves for degaussing during normal operation.
It is recommended that the receiver has some adjustments made before the picture tube is built in. These adjustments should include EHT and deflection, and the dynamic convergence in order to facilitate the adjustment of purity and static convergence. Before deflection power and high voltage are applied to the tube, the bias control should be adjusted for maximum bias. After deflection power and high voltage are applied, the beam currents should be increased gradually to minimize the possibility of tube damage in the event of circuit faults. With the application of a test signal, initial adjustment of focus, raster size, linearity and centring should be made.

6.1 Colour purity and convergence procedures

The normal sequence involves, first, static convergence adjustment next the purifying magnet and adjustment of the axial position of the deflection coil, and lastly final adjustment of dynamic convergence.

6.1.1 Static convergence adjustment

A crosshatch pattern is the most suitable signal for convergence adjustments. The pattern should be displayed at moderate brightness to improve the accuracy. It is advisable to converge red and green first, with the blue gun cut off, and then to converge blue into the yellow pattern formed by the coinciding of red and green lines.
The red and green beams are made to converge statically by adjusting the permanent magnets of the radial convergence assembly, or the corresponding D.C. currents. Correct convergence is obtained when the lines in the centre converge to give yellow.
Before the blue lateral convergence magnet is used, the blue lines are brought horizontally adjacent to the yellow lines by means of the radial blue static convergence adjustment (permanent magnet or D.C. current).
Hereafter the blue lines are made to converge with the yellow lines in the centre with the aid of the blue lateral convergence magnet, resulting in white lines in the centre. If necessary this procedure is repeated.

6.1.2 Adjustment for colour purity

Adjustment for colour purity involves two steps:
Adjustment of the purifying magnets. (6.1.2.1)
Adjustment of the position of the deflection coil. (6.1.2.2)
To obtain optimum adjustment, the static and dynamic convergence should be adjusted previously and the picture tube degaussed and well warmed up to normal operating temperature (approx. 30 min, total beam current 600 μA).
Purity assessments are best made on a plain raster.

APPLICATION NOTES (continued)

Adjustment of the purifying magnets influences purity all over the screen. The deflection coil adjustment influences purity mainly at the screen edges. Therefore, the magnets have to be adjusted before the coil.

6.1.2.1 The purifying magnets are adjusted, judging by the landing in the screen centre. There are two ways of doing this.

The first method makes use of a microscope (magnification about 50x). With this method, the deflection coil need not possess more axial adjustment margin than that needed to cope with the spreads of the deflection centres. (12 mm total).

With the microscope, the position of the spot trio's is compared with the position of the phosphor dot trio's at the screen centre. To do this, the three colour rasters are displayed simultaneously, and the phosphor dots are illuminated by means of a light source, shining onto the screen at a small angle. The spot trio's should be made to land on the phosphor dot trio's as shown in Fig.1, with their centre points coinciding.

Due to the beam grouping used in this tube (which improves the overall landing) the spots will then be approx. 25 μm eccentric with respect to their corresponding phosphor dots.

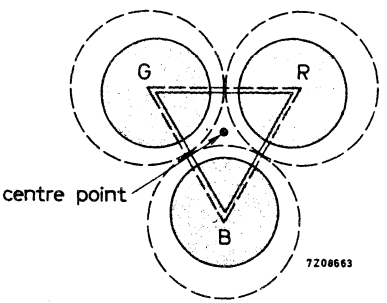

Fig.1. Correct landing in the screen centre.

The second method ("Red ball" method) is applicable if the mounting of the deflection coil is such that it can be drawn away approx. 20 mm backwards from its foremost position when it touches the funnel.

The coil is moved backwards as far as possible, and only the red raster is turned on. (The red gun needs relatively the highest current, thus mislanding on blue and green phosphor dots is seen more clearly so that a sharp indication is obtained).

Now a red area of approx. 10 cm diameter is visible on the screen, surrounded by discoloured and blue and green areas. With the aid of the purifying magnets, the red area is positioned near the screen centre. In order that the above mentioned beam grouping shows to full adventage, the red area should be positioned 20 mm down to the left of the screen centre, see Fig.2.

APPLICATION NOTES (continued)

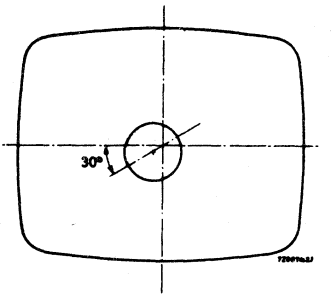

Fig.2

6.1.2.2 After adjustment of the purifying magnets, the deflection coil is adjusted by shifting it axially until optimum landing over the entire screen is reached. This can be done in two stages:

1. Only the red raster turned on, and the coil position giving an overall pure red raster sought.
2. For the final adjustment, a white raster is displayed and, if necessary, very slight adjustment of the deflection coil position made to obtain the best white uniformity.

After having completed 1 and 2, the red, green and blue rasters are checked separately for their purity, and if necessary the procedure repeated.

6.1.3 Adjustment of dynamic convergence

Just as for the static convergence a crosshatch pattern is recommended, displayed at low brightness.
It is advisable to adjust first the convergence in the vertical direction (with frame frequency) and then the horizontal convergence (with currents of line frequency). During the dynamic convergence adjustments, the static convergence (6.1.1) may need readjustment depending on the efficiency of any clamping circuits used.

A favourable sequence is to adjust the red and green convergence controls first so that both rasters coincide to display yellow lines while the blue gun is kept cut-off. Thereafter the blue pattern is added and adjusted to coincide with the yellow to give a white pattern. However, as the blue horizontal convergence system usually has a significant power consumption which influences the line time base to some degree, it is often advisable to start the whole convergence procedure by adjusting the blue horizontal convergence controls coarsely to give a straight blue horizontal centre line.

During the vertical dynamic convergence adjustment, the vertical axis of the screen should be taken as reference, while the horizontal adjustments should be referred to the horizontal axis. During the latter sequence the lateral blue dynamic convergence is also adjusted.

APPLICATION NOTES (continued)

The currents for dynamic convergence (except blue lateral) consist of two components, viz. one of parabolic and one of sawtooth wave form Usually both have their own controls which have to be adjusted in combination to obtain convergence. The parabolic ("amplitude") controls are used to make the configurations at the extremities of the picture axis equal to that at the centre. With the sawtooth ("phase" or "tilt") control the two extremities of the picture axis are made equal to each other as far as possible.
In addition, the blue horizontal convergence needs an extra waveform correction to correct for the tilting of the outer edges.
The blue lateral waveform needed is basically a sawtooth. Left-to-right asymmetry can be adjusted by slight rotation of the radial convergence assembly.

By repeated adjustments of the controls the line patterns in the various colours ultimately coincide and become parallel to each other. Thereafter these are made to coincide with the aid of the static convergence magnets to white lines.

After convergence onto the axes is obtained, usually some errors in the corners of the picture remain. Slight readjustment may be needed to minimize these errors.

At the end of the procedure purity is checked, and readjusted if needed, with the aid of the purifying magnets.

6.2 Adjustment of grey scale

This adjustment is carried out last of all and the sequence of the manipulations depends on receiver circuitry.

To obtain a constant hue of white over the whole grey scale when displaying a monochrome signal, the three guns must track accurately. This can be achieved by adjusting two points of each gun characteristic, one near cut-off and one near the highlights. To this end the following variables are available, and in a receiver two of them must be made adjustable for each gun:
1. cut-off point (V_{g_1})
2. slope (V_{g_2})
3. drive

The proper adjustment procedure depends on receiver circuitry. After adjustment, the brightness and contrast controls should not cause any change in hue, and the chosen white point should be displayed.

6.3 Focusing

The focusing voltage for all three guns can be adjusted via the common focus base pin No.9. In order to obtain optimum focus it is recommended to use a black-and-white picture with a low peak to mean brightness ratio, such as the RMA test picture, running at a total mean current of about 1 mA (peak currents in the three guns in the order of 2.5 mA), and to focus at the highlights. This procedure will give best overall focus.

Brightness at the centre of the screen as a function of I_{total} for white CIE coordinates
x = 0.310, y = 0.316 3)

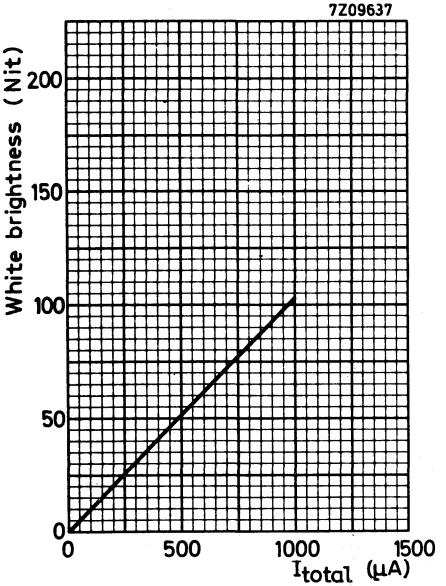

Brightness at the centre of the screen as a function of I_{total} for white CIE coordinates
x = 0.265, y = 0.290 4)

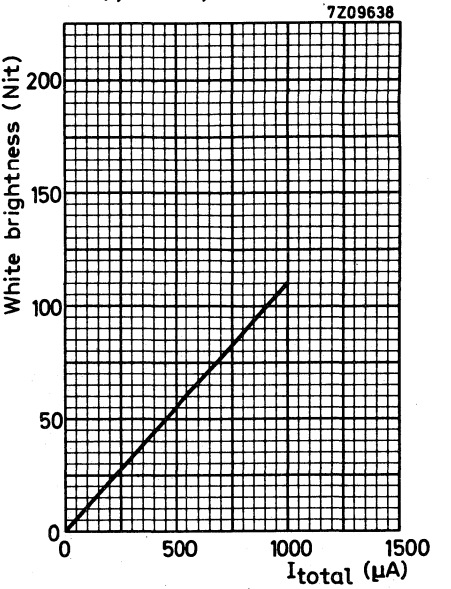

Brightness at the centre of the screen as a function of I_{total} for white CIE coordinates
x = 0.281, y = 0.311 5)

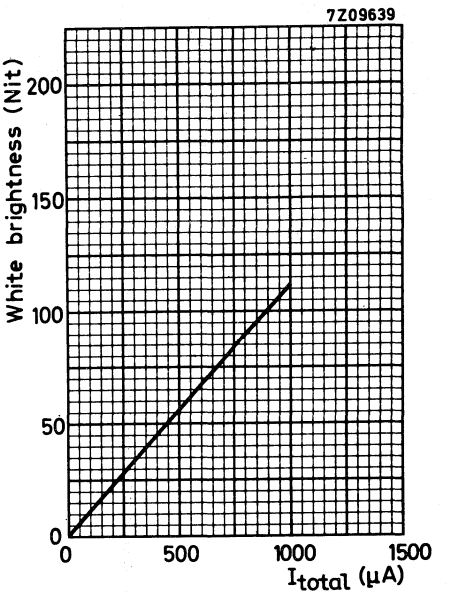

Scanned area 504 mm x 396 mm

3)4)5) See page 8.

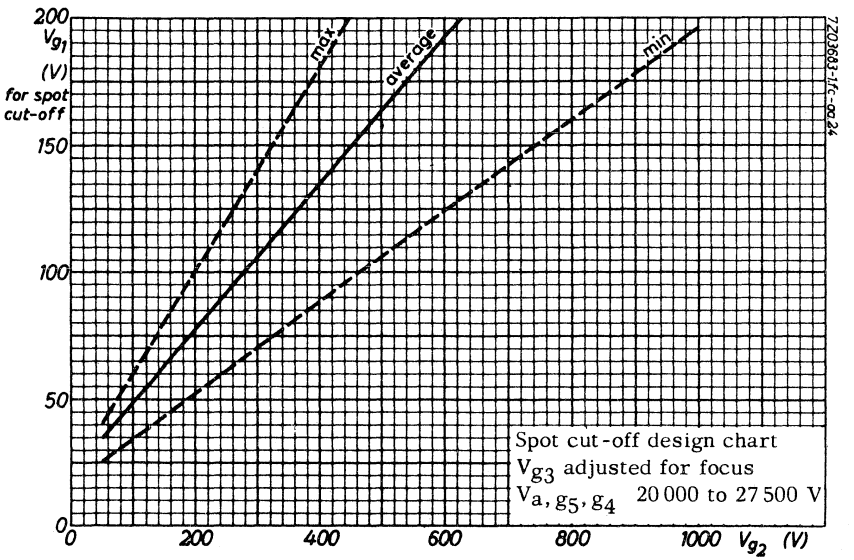
200
V_{g_1} (V) for spot cut-off
150
100
50
0
0
200
400
600
800
1000
V_{g_2} (V)
max.
average
min.
Spot cut-off design chart
V_{g_3} adjusted for focus
Va, g_5, g_4 20 000 to 27 500 V
7ZC693-1fc-oc24

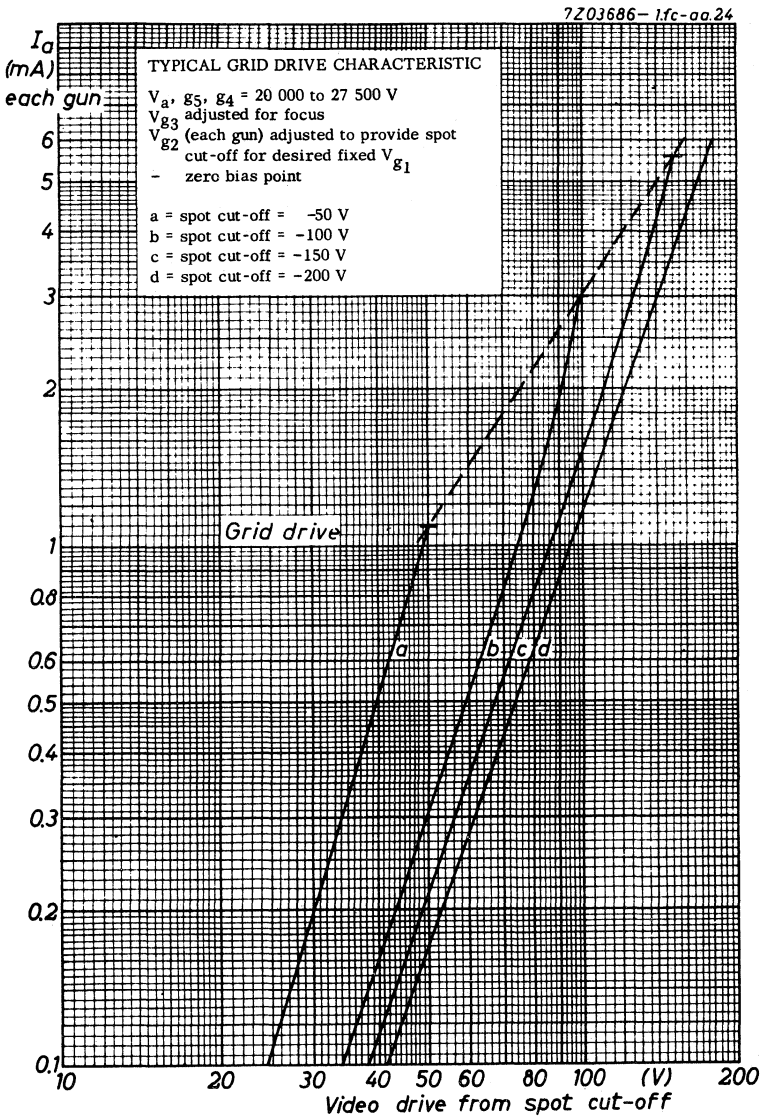
7Z03686-1.fc-aa.24
I_a (mA) each gun
TYPICAL GRID DRIVE CHARACTERISTIC
V_a, g_5, g_4 = 20 000 to 27 500 V
V_{g3} adjusted for focus
V_{g2} (each gun) adjusted to provide spot cut-off for desired fixed V_{g1}
– zero bias point
a = spot cut-off = -50 V
b = spot cut-off = -100 V
c = spot cut-off = -150 V
d = spot cut-off = -200 V
Grid drive
a
b
c
d
6
5
4
3
2
1
0.8
0.6
0.5
0.4
0.3
0.2
0.1
10
20
30
40
50
60
80
100
(V)
200
Video drive from spot cut-off

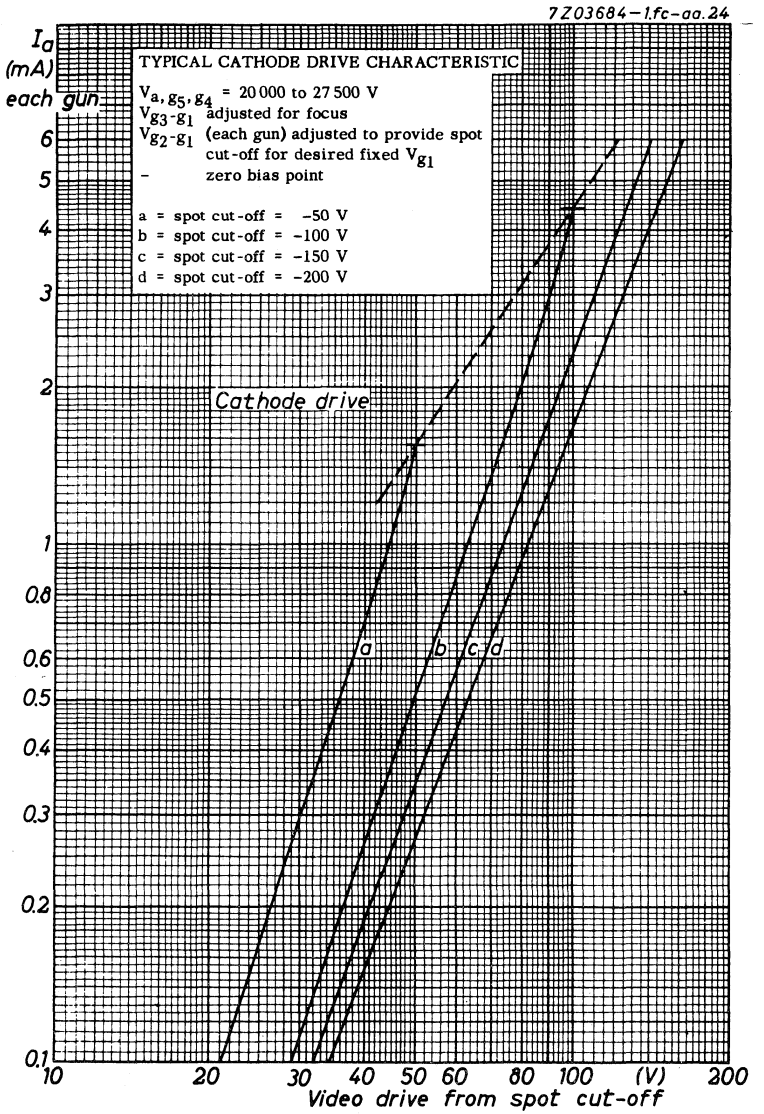
7Z03684-1.fc-aa.24
I_a (mA) each gun
TYPICAL CATHODE DRIVE CHARACTERISTIC
V_{a,g_5,g_4} = 20 000 to 27 500 V
$V_{g_3-g_1}$ adjusted for focus
$V_{g_2-g_1}$ (each gun) adjusted to provide spot cut-off for desired fixed V_{g_1}
– zero bias point
a = spot cut-off = –50 V
b = spot cut-off = –100 V
c = spot cut-off = –150 V
d = spot cut-off = –200 V
Cathode drive
6
5
4
3
2
1
0.8
0.6
0.5
0.4
0.3
0.2
0.1
a
b
c
d
10
20
30
40
50
60
80
100
(V)
200
Video drive from spot cut-off

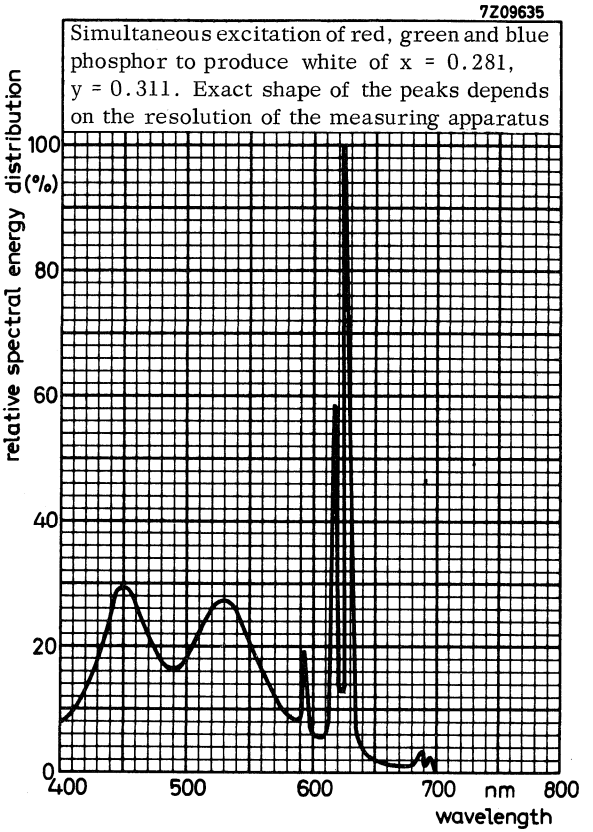

Colour coordinates

	x	y
red	0.630	0.340
green	0.315	0.600
blue	0.150	0.060

T.V. PICTURE TUBE

65 cm (25 inch), 110°, rectangular direct vision picture tube for black- and white T.V. with integral protection.

QUICK REFERENCE DATA		
Face diagonal	65	cm (25 inch)
Deflection angle	110°	
Overall length	383	mm
Neck diameter	28.6	mm
Light transmission of face glass	43	%
Focusing		electrostatic
Bulb		reinforced
Heating	6.3 V, 300	mA

SCREEN

Metal backed phosphor

Luminescence	white		
Light transmission of face glass		43	%
Useful diagonal	min.	616.5	mm
Useful width	min.	530	mm
Useful height	min.	416	mm

HEATING

Indirect by A.C. or D.C.; series or parallel supply

Heater current	I_f	300	mA
Heater voltage	V_f	6.3	V

If the tube is connected in a series heater chain the surge heater voltage must not exceed 9.5 V_{rms} when the supply is switched on.

MECHANICAL DATA

Dimensions in mm

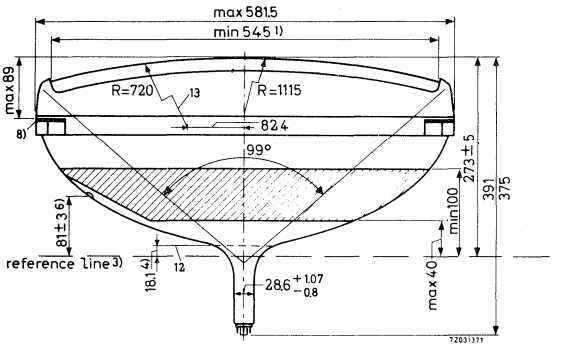

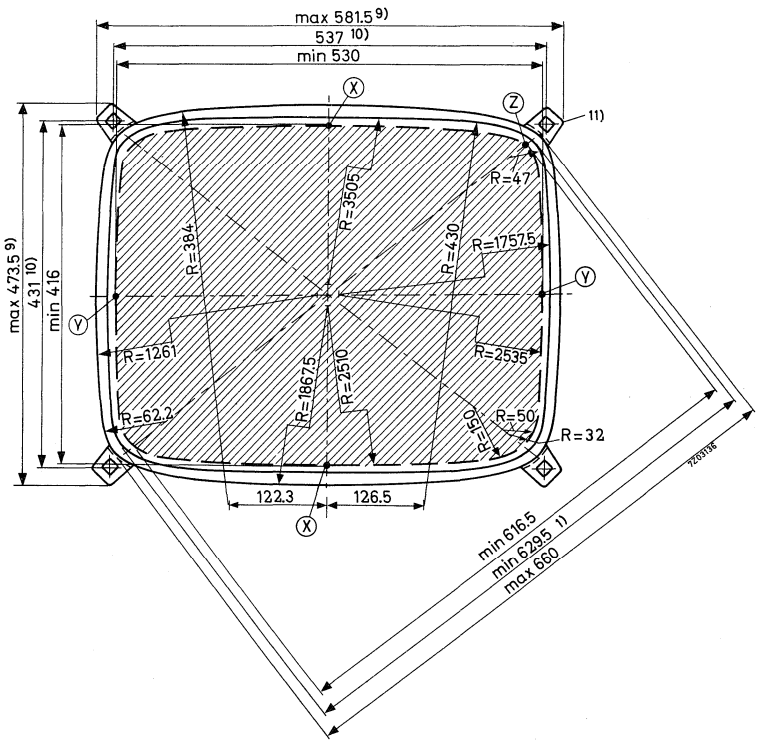

MECHANICAL DATA

Dimensions in mm

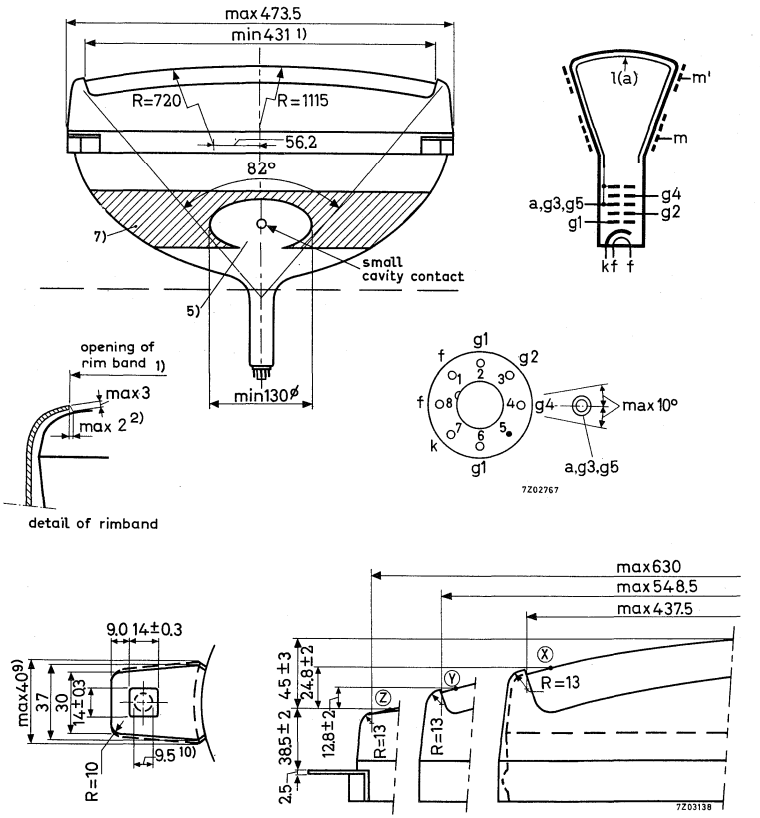

Mounting position: any

Base : B8H. JEDEC B7-208

Net weight : approx. 18 kg

The bottom circumference of the base wafer will fall within a circle concentric with the tube axis and having a diameter of 40 mm.
The socket for the base should not be rigidly mounted; it should have flexible leads and be allowed to move freely.

For notes see page 5.

MAXIMUM CONE CONTOUR DRAWING

Dimensions in mm

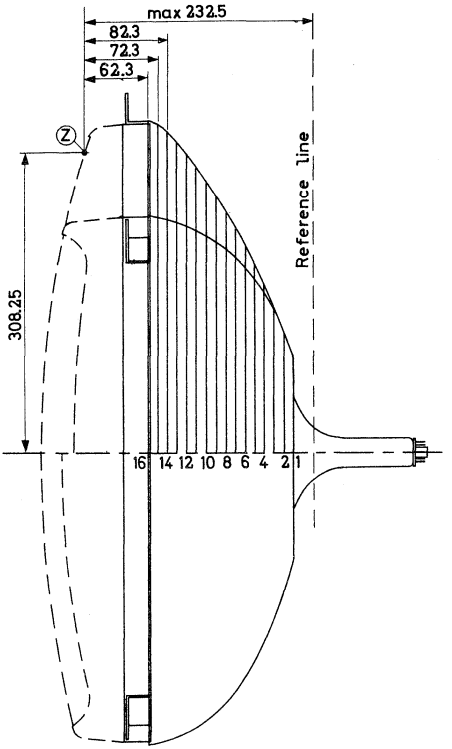

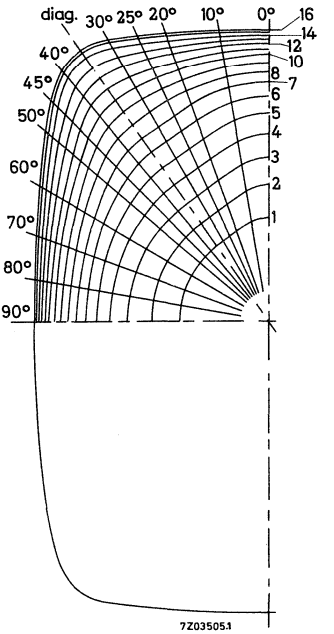

Section	Distance from point 'Z', nom.	Distance from centre (max. values)												
		short 90°	80°	70°	60°	50°	45°	40°	35°19'10" Diag.	30°	25°	20°	10°	long 0°
1	212.3	92.24	92.24	92.24	92.24	92.24	92.24	92.24	92.24	92.53	93.35	94.72	100.37	104.74
2	202.3	119.93	119.93	119.93	119.93	119.93	119.93	119.93	119.93	120.40	121.77	124.07	132.29	137.75
3	192.3	143.52	143.57	143.69	143.91	144.20	144.35	144.48	144.51	145.13	146.89	149.84	159.18	164.63
4	182.3	160.98	161.20	161.86	163.07	164.79	165.69	166.53	166.78	167.51	169.56	172.98	182.71	187.71
5	172.3	174.77	175.19	176.54	179.02	182.69	184.69	186.60	187.21	188.02	190.28	194.10	203.78	208.10
6	162.3	186.16	186.81	188.87	192.72	198.58	201.86	205.09	206.12	207.00	209.44	213.56	222.18	225.17
7	152.3	195.79	196.66	199.46	204.74	212.90	217.57	222.24	223.77	224.70	227.27	230.93	236.60	238.51
8	142.3	204.02	205.13	208.68	215.40	225.93	232.05	238.27	240.31	241.16	243.07	245.22	248.37	249.42
9	132.3	211.10	212.44	216.75	224.93	237.87	245.49	253.31	255.91	256.17	256.72	257.31	258.24	258.56
10	122.3	217.19	218.77	223.84	233.51	248.89	258.02	267.49	270.66	269.93	268.73	267.75	266.62	266.30
11	112.3	222.40	224.22	230.08	241.24	259.08	269.75	280.90	284.65	282.62	279.42	276.87	273.79	272.88
12	102.3	226.82	228.89	235.55	248.22	268.54	280.76	293.62	297.96	294.38	289.01	284.89	279.94	278.45
13	92.3	230.52	232.84	240.31	254.52	277.34	291.13	305.71	310.64	305.34	297.66	291.95	285.17	283.13
14	82.3	233.54	236.12	244.43	260.21	285.55	300.91	317.12	322.55	315.57	305.48	298.18	289.59	287.02
15	72.3	235.91	238.77	247.94	265.31	292.19	307.83	324.05	329.49	322.52	311.93	303.61	293.27	290.15
16	62.3	237.66	240.78	250.53	268.22	295.09	310.74	326.96	332.39	325.43	314.83	306.51	295.89	292.46

7Z2 5123

NOTES TO OUTLINE DRAWING

1. Opening of metal rimband. The eccentricity of this opening with respect to the centre of the screen is max. 1.5 mm (see detail).
2. Meniscus of resin filler screen.
3. Reference line is determined by the plane of the upper edge of the flange of the reference line gauge, when the gauge is resting on the cone. Reference line gauge C (JEDEC 126).
4. The maximum neck and cone contour given by reference line gauge C.
5. This area must be kept clean.
6. Recessed cavity contact.
7. The configuration of outer conductive coating is optional, but contains the contact area as shown on drawing.
   The external conductive coating must be earthed.
8. The deviation of any lug with respect to the plane through the other three lugs is maximum 2 mm.
9. Minimum space to be reserved for mounting lugs.
10. The mounting screws in the cabinet must be situated inside a circle of 9.5 mm diameter drawn around the true geometrical position i.e. corners of a rectangle of 537 mm x 431 mm.
11. The metal rimband must be earthed.
    Electrical contact between the band and the mounting lugs is guaranteed.
12. End of guaranteed zone
13. Applies also to diagonal.

CAPACITANCES

Final accelerator to external conductive coating	$C_{a,g_3,g_5/m}$	max. 2500 min. 1700	pF pF
Final accelerator to metal band	$C_{a,g_3,g_5/m'}$	max. 450	pF
Cathode to all other elements	C_k	4	pF
Grid No.1 to all other elements	C_{g_1}	6	pF

FOCUSING electrostatic

DEFLECTION magnetic

Diagonal deflection angle	110°
Horizontal deflection angle	99°
Vertical deflection angle	82°

PICTURE CENTRING MAGNET

Field intensity perpendicular to the tube axis adjustable from 0 to 800 A/m (0 to 10 Oerstedt).
Maximum distance between centre of field of this magnet and reference line: 57 mm.

TYPICAL OPERATING CONDITIONS

Grid drive service

Final accelerator voltage	V_{a,g_3,g_5}	20	kV
Focusing electrode	V_{g_4}	0 to 400	V [1]
Grid No.2 voltage	V_{g_2}	500	V
Grid No.1 voltage for visual extinction of focused raster	V_{g_1}	-50 to -93	V

Cathode drive service

Voltages are specified with respect to grid No.1

Final accelerator voltage	V_{a,g_3,g_5}	20	kV
Focusing electrode voltage	V_{g_4}	0 to 400	V [1]
Grid No.2 voltage	V_{g_2}	500	V
Cathode voltage for visual extinction of focused raster	V_k	45 to 80	V

[1]) Voltage range to obtain optimum overall focus at 100 μA beam current.

LIMITING VALUES (Design centre rating system, unless otherwise stated)

Final accelerator voltage at $I_{a,g_3,g_5} = 0$	V_{a,g_3,g_5}	max. min.	20 11	kV kV	[1]
Grid No. 4 voltage,					
positive	V_{g_4}	max.	1000	V	
positive peak	$V_{g_{4p}}$	max.	2500	V	[2]
negative	$-V_{g_4}$	max.	500	V	
Grid No. 2 voltage	V_{g_2}	max. min.	700 350	V V	[3]
Grid No. 2 to grid No. 1 voltage	V_{g_2}/V_{g_1}	max.	850	V	
Grid No. 1 voltage,					
positive	V_{g_1}	max.	0	V	
positive peak	$V_{g_{1p}}$	max.	2	V	
negative	$-V_{g_1}$	max.	150	V	
negative peak	$-V_{g_{1p}}$	max.	400	V	[2]
Cathode grid No. 1 voltage,					
positive	V_{k/g_1}	max.	150	V	
positive peak	$V_{k/g_{1p}}$	max.	400	V	[2]
negative	$-V_{k/g_1}$	max.	0	V	
negative peak	$-V_{k/g_{1p}}$	max.	2	V	
Cathode to heater voltage,					
positive	$V_{k/f}$	max.	250	V	
positive peak	V_{k/f_p}	max.	300	V	
negative	$-V_{k/f}$	max.	135	V	
negative peak	$-V_{k/f_p}$	max.	180	V	
positive during equipment warm-up period not exceeding 15 s	$V_{k/f}$	max.	410	V	[4]

[1]) Absolute maximum rating system.

[2]) Maximum pulse duration 22% of a cycle but maximum 1.5 ms.

[3]) At $V_{g_1/k} = 0$ V.

[4]) Between 15 s and 45 s after switching on a decrease in k/f voltage, linear proportional with time, from 410 V to 250 V is permissible.

CIRCUIT DESIGN VALUES

Grid No 4 current,			
positive	I_{g_4}	max. 25	μA
negative	$-I_{g_4}$	max. 25	μA
Grid No 2 current			
positive	I_{g_2}	max. 5	μA
negative	$-I_{g_2}$	max. 5	μA

MAXIMUM CIRCUIT VALUES

Resistance between cathode and heater	$R_{k/f}$	max. 1	MΩ
Impedance between cathode and heater	$Z_{k/f}$ (50 Hz)	max. 0.1	MΩ
Grid No.1 circuit resistance	R_{g_1}	max. 1.5	MΩ
Grid No.1 circuit impedance	Z_{g_1} (50 Hz)	max. 0.5	MΩ
Resistance between external conductive coating and rimband	$R_{m/m'}$	min. 2	MΩ

90° RECTANGULAR COLOUR TELEVISION TUBE WITH INTEGRAL PROTECTION

Three-gun temperature-compensated shadow-mask rectangular colour television tube with electrostatic focus, magnetic deflection and convergence, metal-backed three-colour phosphor dot screen. A high white brightness is obtained at near unity current ratio. Being temperature compensated, the shadow-mask makes for optimum field purity and good uniformity during warm-up. Minimum occurrence of the moiré effect is ensured by optimizing the shadow-mask for reproduction of 625-line pictures. The tube has a reinforced envelope and therefore no separate safety screen is necessary. The rimband leaves the edge of the faceplate free.

QUICK REFERENCE DATA		
TEMPERATURE COMPENSATED SHADOW-MASK		
SHADOW-MASK OPTIMIZED FOR 625-LINE SYSTEM		
HIGH WHITE BRIGHTNESS AT UNITY CURRENT RATIO		
Face diagonal	66	cm
Deflection angle	90	o
Neck diameter	36.5	mm
Envelope	reinforced	
Focusing	electrostatic	
Deflection	magnetic	
Convergence	magnetic	
Heating	6.3 V, 900	mA
Light transmission	52.5	%

SCREEN

Metal-backed tricolour phosphor dots

Phosphor type	Red: Europium activated rare earth Green and blue: sulphide type		
Dot arrangement	Triangular		
Spacing between centres of adjacent dot trios		0.81	mm
Light transmission at centre of face glass		52.5	%

HEATING

Indirect by A.C. or D.C.; parallel or series supply

Heater voltage	V_f	6.3	V
Heater current	I_f	900	mA

For maximum cathode life it is recommended that the heater supply be regulated at 6.3 V. If the tube is connected in a series heater chain the surge heater voltage must not exceed 9.5 V_{rms} when the supply is switched on.

CAPACITANCES

Final accelerator to external conductive coating	$C_{ag5g4/m}$	max. 2500 min. 2000	pF pF
Final accelerator to metal rimband	$C_{ag5g4/m'}$	500	pF
Grid No. 1 of any gun to all other electrodes	C_{g1}	7	pF
Cathodes of all guns (connected in parallel) to all other electrodes	C_k	15	pF
Cathode of any gun to all other electrodes	C_{kR} C_{kG} C_{kB}	5 5 5	pF pF pF
Grid No. 3 (focusing electrode) to all other electrodes	C_{g3}	7	pF

FOCUSING electrostatic

DEFLECTION magnetic

Diagonal deflection angle	92 °
Horizontal deflection angle	79 °
Vertical deflection angle	61 °

CONVERGENCE magnetic

MECHANICAL DATA

Overall length			521.8±6.5	mm
Neck length			164.2±4.5	mm
Diagonal		max.	657.6	mm
Horizontal axis	of bulb	max.	556.4	mm
Vertical axis		max.	435.3	mm
Useful screen diagonal		min.	617.8	mm
horizontal axis		min.	518	mm
vertical axis		min.	390	mm

Mounting position: any

Net weight: approx.21.5 kg

Base: 12 pin base JEDEC B12-246

Anode contact: Small cavity contact J1-21, IEC67-III-2

Magnetic shielding

Magnetic shielding should be provided by means of a metal shield extending 285 mm over the cone of the tube measured from the centre of the face plate. The metal shield is preferably constructed of min. 0.5 mm cold rolled steel properly annealed. The air gap between the shield and the metal rimband should be as small as possible and not exceed 10 mm. The magnetic shield should be connected to the outer conductive coating.

NOTES TO OUTLINE DRAWING (See pages 4, 5 and 6)

1. Reference line determined by the plane of the upper edge of the flange of the reference line gauge, when the gauge is resting on the cone. Gauge see page 10.
2. The socket for this base should not be rigidly mounted; it should have flexible leads and be allowed to move freely. Bottom circumference of base will fall within a circle concentric with bulb axis and having a diameter of 55 mm.
3. Configuration of outer conductive coating may be different, but will contain the contact area as shown in the drawing.
4. To clean this area, whipe only with a soft lintless cloth.
5. The displacement of any lug with respect to the plane through the three other lugs is max. 2 mm
6. Minimum space to be reserved for mounting lug.
7. The position of the mounting screw in the cabinet must be within a circle of 9.5 mm diameter drawn around the true geometrical positions, i.e. the corners of a rectangle of 549 mm x 422 mm.
8. Coördinates for radius R = 18.2 mm: x = 236.6 mm, y = 168.9 mm
9. Distance from point Z to any hardware.
10. Maximum dimension in plane of lugs.
11. a = 30.0 mm on diagonal, 28.4 mm on major axis, 18.8 mm on minor axis.

MECHANICAL DATA (continued) Dimensions in mm

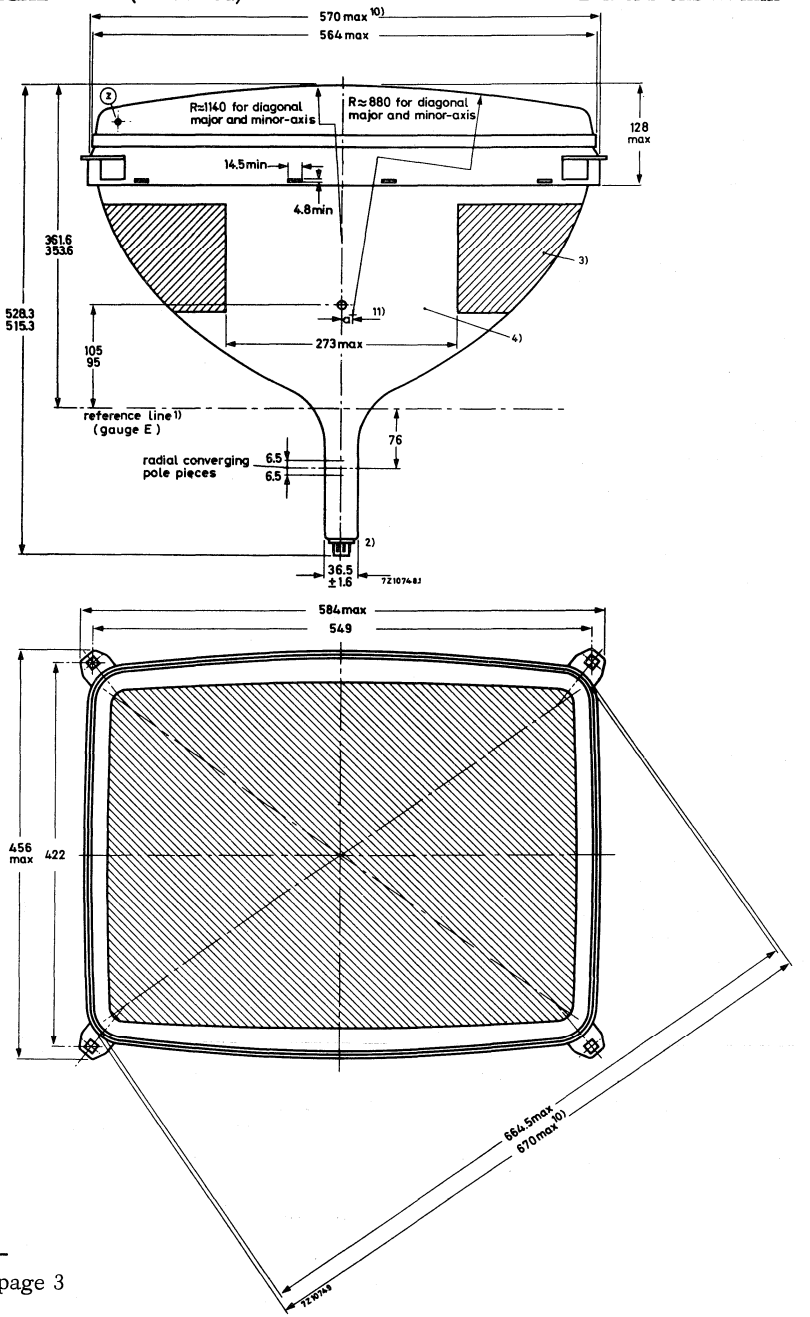

Notes see page 3

MECHANICAL DATA (continued)

Dimensions in mm

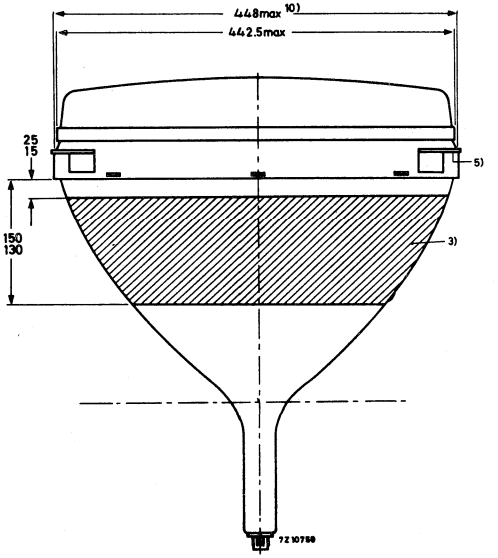

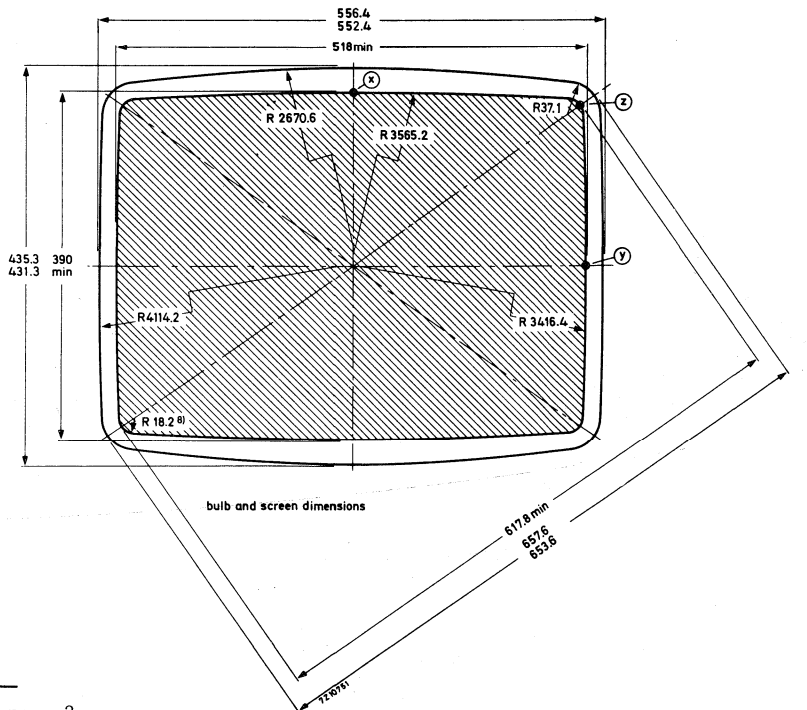

Notes see page 3

MECHANICAL DATA (continued)

Dimensions in mm

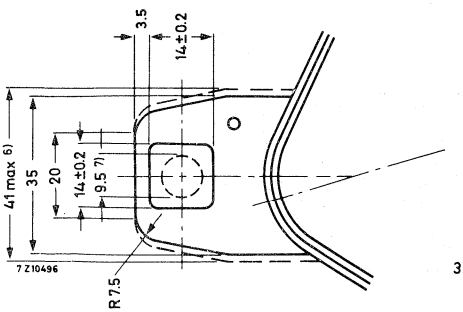

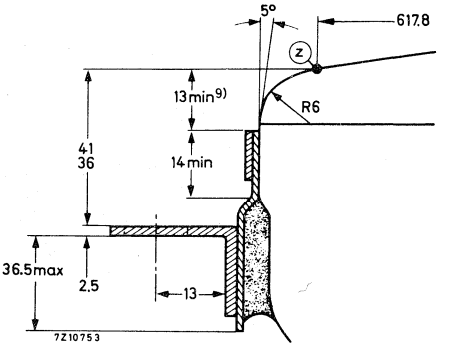

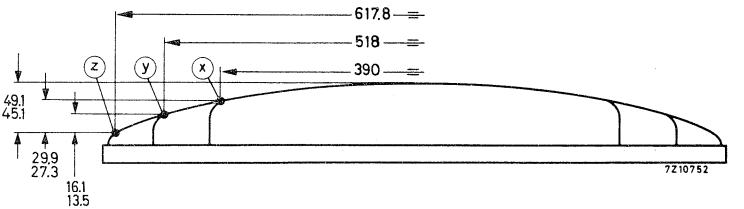

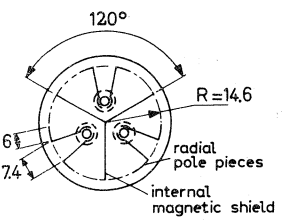

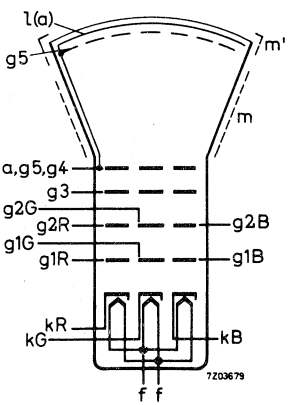

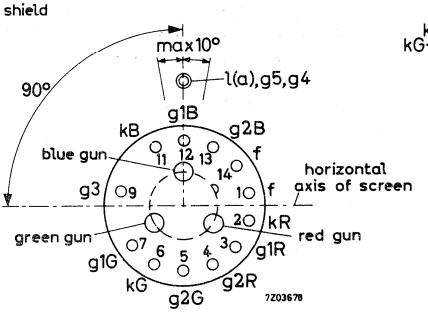

Notes see page 3

TYPICAL OPERATING CONDITIONS

Final accelerator voltage	V_{a,g_5,g_4}	25	kV
Grid No. 3 (focusing electrode) voltage	V_{g_3}	4.2 to 5	kV
Grid No. 2 voltage for a spot cut-off voltage V_{g_1} = −105 V	V_{g_2}	210 to 495	V [1]
Grid No. 1 voltage for spot cut-off at V_{g_2} = 300 V	V_{g_1}	−70 to −140	V [2]
Brightness at centre of screen		see page 11	

EQUIPMENT DESIGN VALUES (each gun if applicable)

Valid for final accelerator voltages between 20 kV and 27.5 kV

Grid No. 3 (focusing electrode) voltage	V_{g_3}	16.8 to 20% of final accelerator voltage	
Grid No. 2 voltage [1]	V_{g_2}	See cut-off design chart page 12	
Grid No. 1 voltage for visual extinction of focused spot (cut-off voltage) [2]	V_{g_1}	See cut-off design chart page 12	
Difference in cut-off voltages between guns in any tube	ΔV_{g_1}	lowest value is min. 65% of highest value	
Grid No. 3 (focusing electrode) current	I_{g_3}	−15 to +15	μA
Grid No. 2 current	I_{g_2}	−5 to +5	μA
Grid No. 1 current at V_{g_1} = −150 V	I_{g_1}	−5 to +5	μA

To produce white of the following CIE coordinates		3)	4)	5)	6)	
	x	0.310	0.265	0.281	0.313	
	y	0.316	0.290	0.311	0.329	
Percentage of total anode current supplied by each gun (typical)						
red gun		43.5	27.9	32.3	43.1	%
green gun		30.0	34.9	35.6	32.0	%
blue gun		26.5	37.2	32.2	24.9	%
Ratio of anode currents red gun to green gun	min.	1.05	0.55	0.65	0.95	
	av.	1.45	0.80	0.90	1.35	
	max.	2.00	1.10	1.25	1.85	
Ratio of anode currents red gun to blue gun	min.	1.25	0.55	0.75	1.30	
	av.	1.65	0.75	1.00	1.75	
	max.	2.25	1.00	1.35	2.35	

Notes see page 8

EQUIPMENT DESIGN VALUES (continued)

Required centring, measured at the centre of the screen in any direction	max. 15 mm
Correction that must be supplied by purifying magnet to compensate for mis-register in any direction	max. 100 μm
Lateral distance between blue spot and the converged red and green spots	max. 6.4 mm (in both directions)
Radial convergence displacement excluding effects of dymanic convergence (each beam)	max. 9.4 mm [7] (in both directions)

---

1) This range of Vg_2 has to be used when in circuit design fixed values for cut-off of the three guns are used.

2) This range of Vg_1 has to be used when in circuit design fixed values for Vg_2 of the three guns are used.

3) To produce colour pictures with the best possible quality, this white point should be used when the transmission system is based on this point. (Point C).

4) To produce black/white pictures a more bluish white point would be preferable. This white point corresponds virtually with the white point of current black/white picture tubes.

5) This point is a compromise between the white point C and the white point x = 0.265 and y = 0.290, given in order to enable good rendition of colour and black and white pictures with one white point.

6) To produce colour pictures with the best possible quality, this white point should be used when the transmission system is based on this point. (Point D).

7) Dynamic convergence to be effected by currents of approximately parabolic wave-shape synchronized with scanning.

LIMITING VALUES (Each gun if applicable)
(Design centre rating system unless otherwise specified)

Final accelerator voltage	V_a, g5, g4	max.	27.5	kV [1)2)3)]
		min.	20	kV [1)4)]
Average current for three guns	I_a	max.	1000	μA [5)]
Grid No.3 (focusing electrode) voltage	V_{g3}	max.	6000	V
Grid No.2 voltage, peak, including video signal voltage	V_{g2p}	max.	1000	V
Grid No.1 voltage,				
negative	-Vg1	max.	400	V
negative, operating cut-off	-Vg1	max.	200	V
positive	Vg1	max.	0	V
positive peak	V_{g1_p}	max.	2	V
Cathode to heater voltage,				
positive	V_{kf}	max.	250	V [6)7)]
positive peak	V_{kf_p}	max.	300	V
negative	$-V_{kf}$	max.	135	V
negative peak	$-V_{kf_p}$	max.	180	V

1) Absolute max. rating system.

2) The X-ray dose rate remains below the acceptable value of 0.5 mr/h, measured with ionization chambre when the tube is used within its limiting values.

3) For optimal operating conditions the final accelerator voltage has to be stabilized. Therefore its absolute maximum value can be approached in actual operation and for this reason this value is given instead of the design centre value. During adjustment on the production line this value is likely to be surpassed considerably. It is therefore strongly recommended to first make the necessary adjustment for normal operation without picture tube.

4) Operation of the tube at lower voltages impairs brightness and resolution and may have a detrimental effect on colour purity.

5) 1500 μA permitted provided a current limiting circuit is used.

6) In order to avoid excessive hum the a.c. component of the heater to chassis voltage should be as low as possible and must not exceed 20 V_{rms}.

7) During an equipment warm-up period not exceeding 15 s V_{kf} is allowed to rise to 410 V. Between 15 s and 45 s after switching on a decrease in V_{kf} proportional with time from 410 V to 250 V is permissible.

REMARKS

With the high voltage used with this tube (max. 27.5 kV) internal flash-overs may occur, these may destroy the cathode(s) of the tube. Therefore it is necessary to provide protective circuits, using spark gaps.
The spark gaps must be connected as follows:

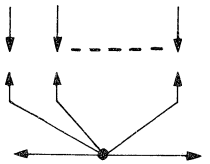

No other connections between the outer conductive coating and the chassis are permissible.
Additional information available on request.

During shipment and handling the tube should not be subjected to accelerations greater than 35 g in any directions.

REFERENCE LINE GAUGE (gauge E)

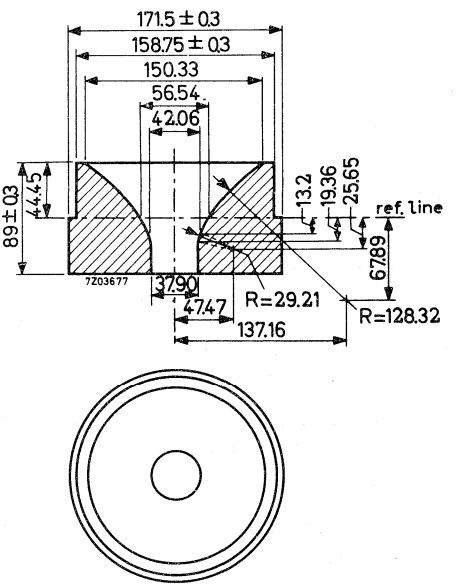

Brightness at the centre of the screen as a function of I_{total} for white C I E coordinates x = 0.310, y = 0.316 [3]

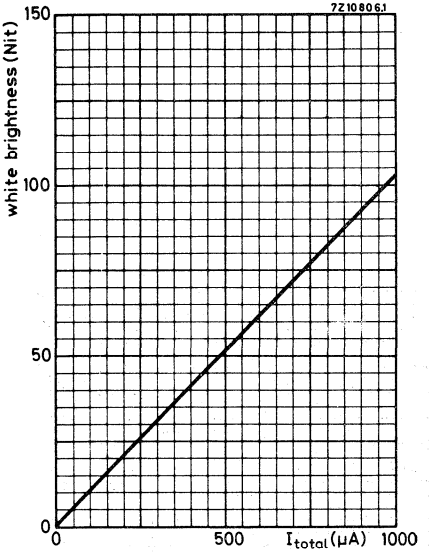

Brightness at the centre of the screen as a function of I_{total} for white C I E coordinates x = 0.265, y = 0.290 [4]

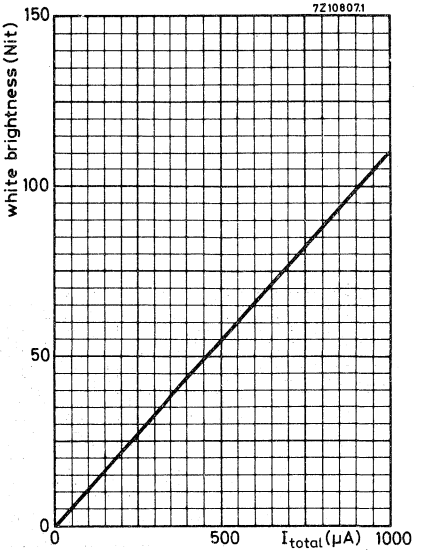

Brightness at centre of screen as a function of I_{total} for white CIE coordinates x = 0.313, y = 0.329 [6]

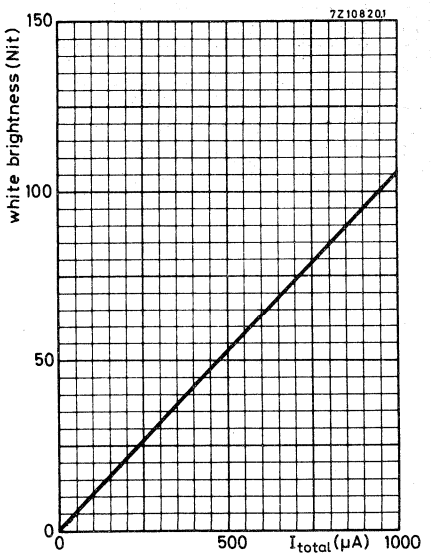

Brightness at the centre of the screen as a function of I_{total} for white C I E coordinates x = 0.281, y = 0.311 [5]

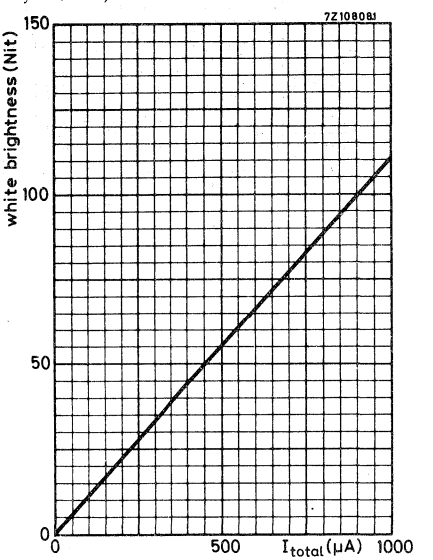

[3][4][5][6] See page 8

Scanned area 518 mm x 390 mm

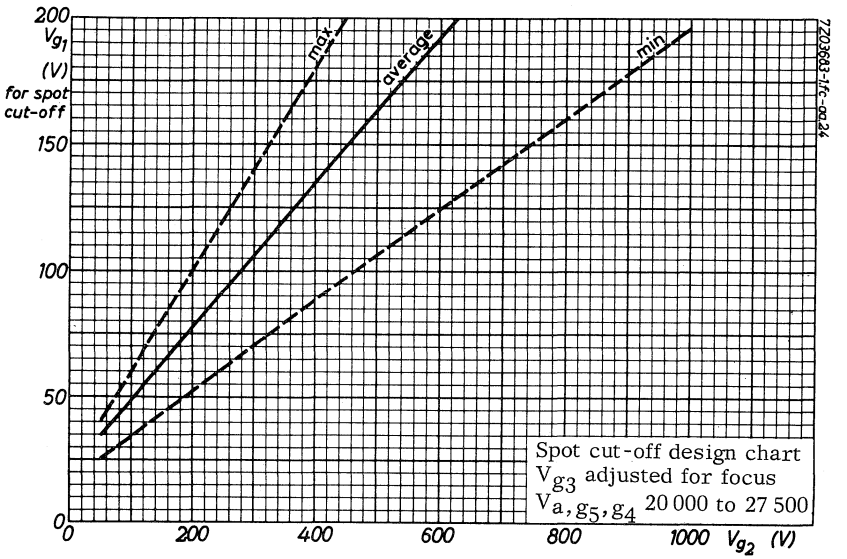
200
V_{g_1}
(V)
for spot
cut-off
150
100
50
0
0
200
400
600
800
1000 V_{g_2} (V)
max.
average
min.
7Z03683-1fc-oa.24
Spot cut-off design chart
V_{g_3} adjusted for focus
V_{a,g_5,g_4} 20 000 to 27 500

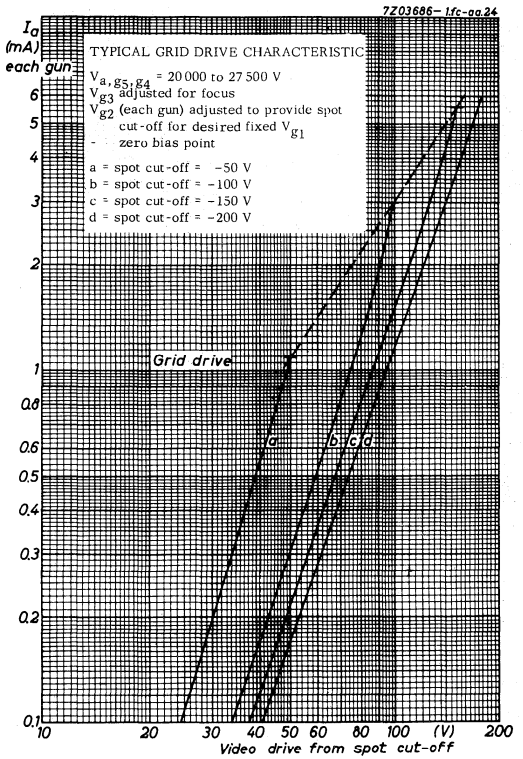
7Z03686-1fc-aa.24
I_a (mA) each gun
TYPICAL GRID DRIVE CHARACTERISTIC
V_{a,g_5,g_4} = 20 000 to 27 500 V
V_{g_3} adjusted for focus
V_{g_2} (each gun) adjusted to provide spot cut-off for desired fixed V_{g_1}
- zero bias point
a = spot cut-off = −50 V
b = spot cut-off = −100 V
c = spot cut-off = −150 V
d = spot cut-off = −200 V
Grid drive
a
b c d
6
5
4
3
2
1
0.8
0.6
0.5
0.4
0.3
0.2
0.1
10
20
30
40
50
60
80
100
(V)
200
Video drive from spot cut-off

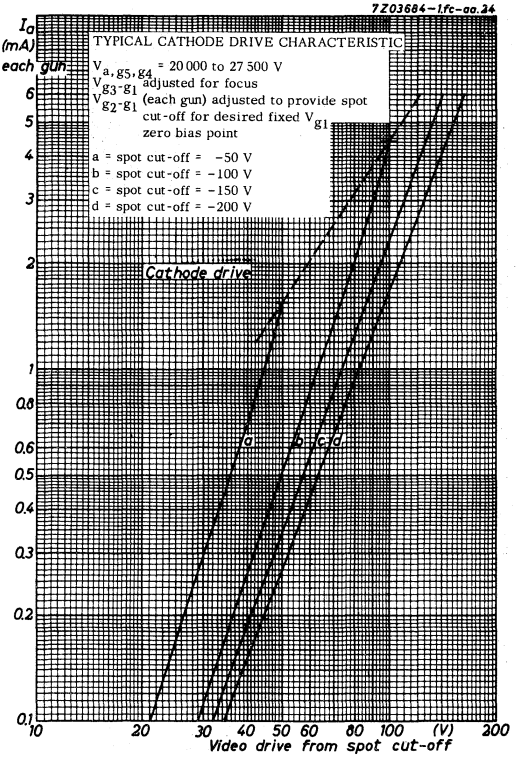
7Z03684-1fc-aa.24
I_a (mA) each gun
TYPICAL CATHODE DRIVE CHARACTERISTIC
$V_{a,g5,g4}$ = 20 000 to 27 500 V adjusted for focus
V_{g3-g1}
V_{g2-g1} (each gun) adjusted to provide spot cut-off for desired fixed V_{g1} zero bias point
a = spot cut-off = −50 V
b = spot cut-off = −100 V
c = spot cut-off = −150 V
d = spot cut-off = −200 V
Cathode drive
a
b
c
d
6
5
4
3
2
1
0.8
0.6
0.5
0.4
0.3
0.2
0.1
10
20
30
40
50
60
80
100
(V)
200
Video drive from spot cut-off

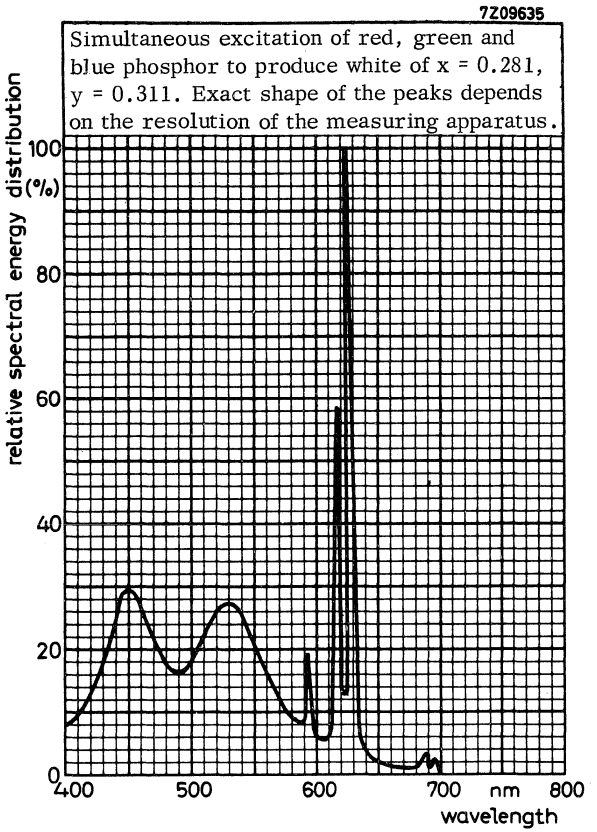

Colour coördinates

	X	Y
red	0.630	0.340
green	0.315	0.600
blue	0.150	0.060

110° RECTANGULAR COLOUR TELEVISION TUBE WITH INTEGRAL PROTECTION

Three-gun temperature-compensated shadow-mask rectangular colour television tube with electrostatic focus, magnetic deflection and convergence, metal-backed three-colour phosphor dot screen and internal magnetic shield. A high white brightness is obtained at near unity current ratio. Being temperature compensated, the shadow-mask makes for optimum field purity and good uniformity during warm-up. The design is such that minimum occurence of the moiré effect is ensured. The tube has a reinforced envelope and therefore no separate safety screen is necessary. The rimband leaves the edge of the faceplate free.

QUICK REFERENCE DATA		
TEMPERATURE-COMPENSATED SHADOW-MASK		
DESIGNED FOR MINIMUM MOIRE EFFECT		
HIGH WHITE BRIGHTNESS AT UNITY CURRENT RATIO		
Face diagonal	66	cm
Deflection angle	110	o
Neck diameter	36.5	mm
Envelope	reinforced	
Magnetic shield	internal	
Focusing	electrostatic	
Deflection	magnetic	
Convergence	magnetic	
Heating	6.3 V, 900 mA	
Light transmission of face glass	52.5	%

SCREEN

Metal-backed phosphor dots

Phosphor type	Red: Europium activated rare earth Green: Sulphide type Blue: Sulphide type		
Dot arrangement	Triangular		
→ Spacing between centres of adjacent dot trios		0.81	mm
→ Light transmission at centre of face glass		52.5	%

HEATING: indirect by A.C. or D.C.; parallel or series supply

Heater voltage	V_f	6.3	V
Heater current	I_f	900	mA

For maximum cathode life it is recommended that the heater supply be regulated at 6.3 V. If the tube is connected in a series heater chain the surge heater voltage must not exceed 9.5 V_{rms} when the supply is switched on.

CAPACITANCES

Final accelerator to external conductive coating	C_a, g_5, g_4/m	max. min.	2500 2000	pF pF
Final accelerator to metal rimband	C_a, g_5, g_4/m'		500	pF
Grid No.1 of any gun to all other electrodes	C_{g1}		7	pF
Cathodes of all guns (connected in parallel) to all other electrodes	C_k		15	pF
Cathode of any gun to all other electrodes	C_{kR} C_{kG} C_{kB}		5 5 5	pF pF pF
Grid No.3 (focusing electrode) to all other electrodes	C_{g3}		7	pF

FOCUSING electrostatic

DEFLECTION magnetic

Diagonal deflection angle	110	o
Horizontal deflection angle	97	o
Vertical deflection angle	77	o

CONVERGENCE magnetic

MECHANICAL DATA

Overall length			425.1 to 438.1	mm
Neck diameter			36.5	mm
Diagonal	of bulb	max.	657.6	mm
Horizontal axis	of bulb	max.	556.4	mm
Vertical axis	of bulb	max.	435.3	mm
Useful screen				
diagonal		min.	617.8	mm
horizontal axis		min.	518	mm
vertical axis		min.	390	mm

Mounting position : any

Net weight : approx. 20 kg

Base : 12 pin base JEDEC B12-246

Anode contact : Small cavity contact J1-21, IEC 67-III-2

Magnetic shielding, degaussing: The tube is provided with an internal magnetic shield. The internal magnetic shield and the shadow-mask with its suspension system may be provided with an automatic degaussing system, consisting of two coils covering left and right cone parts. For proper degaussing an initial m.m.f. of 500 ampere-turns is required in each of the coils. This m.m.f. has to be gradually decreased by appropriate circuitry. After decreasing to 10 A.t. or less, sudden switch off is permissible. In the steady state, no significant m.m.f. should remain in the coils ($\leq$ 0.5 A.t).

To ease the mounting of the coils, the rimband is provided with rectangular holes.

NOTES TO OUTLINE DRAWINGS (See pages 4, 5, and 6)

1) Reference line, determined by the plane of the upper edge of the flange of the reference line gauge, when the gauge is resting on the cone.
2) The socket for this base should not be rigidly mounted; it should have flexible leads and be allowed to move freely. Bottom circumference of base will fall within a circle concentric with the tube axis and having a diameter of 55 mm.
3) Configuration of outer conductive coating may be different, but will contain the contact area as shown in the drawing.
4) To clean this area, wipe only with a soft lintless cloth.
5) The displacement of any lug with respect to the plane through the three other lugs is max. 2 mm.
6) Minimum space to be reserved for mounting lug.
7) The position of the mounting screw in the cabinet must be within a circle of 9.5 mm diameter drawn around the true geometrical positions, i.e. the corners of a rectangle of 549 mm x 422 mm.
8) Coördinates for radius R = 18.2 mm: x = 236.6 mm, y = 168.9 mm.
9) Distance from point z to any hardware.
10) Maximum dimensions in plane of lugs.
11) Dimension a = 30.0 mm on diagonal, 28.4 mm on major axis, 18.8 mm on minor axis.

MECHANICAL DATA (continued)

Dimensions in mm

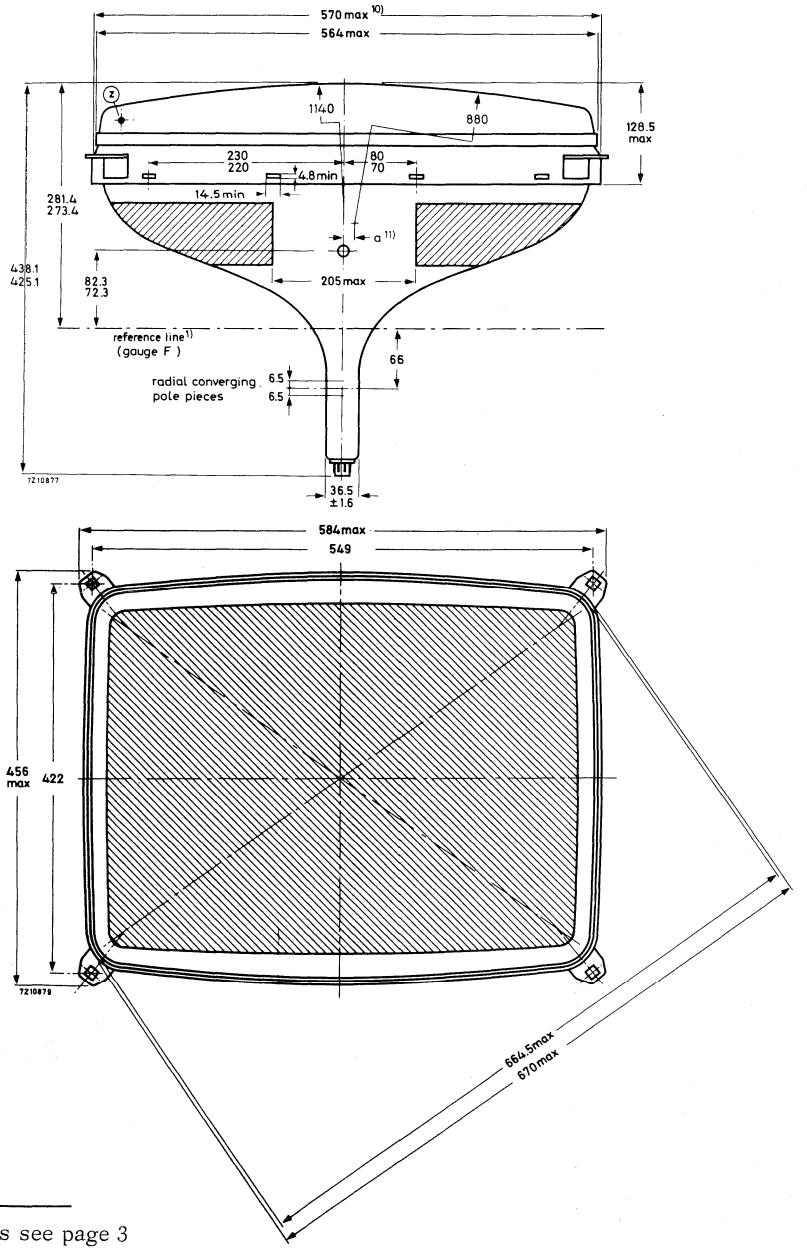

Notes see page 3

MECHANICAL DATA

Dimensions in mm

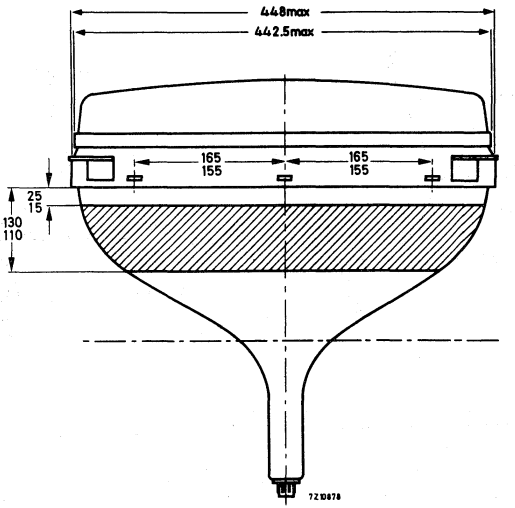

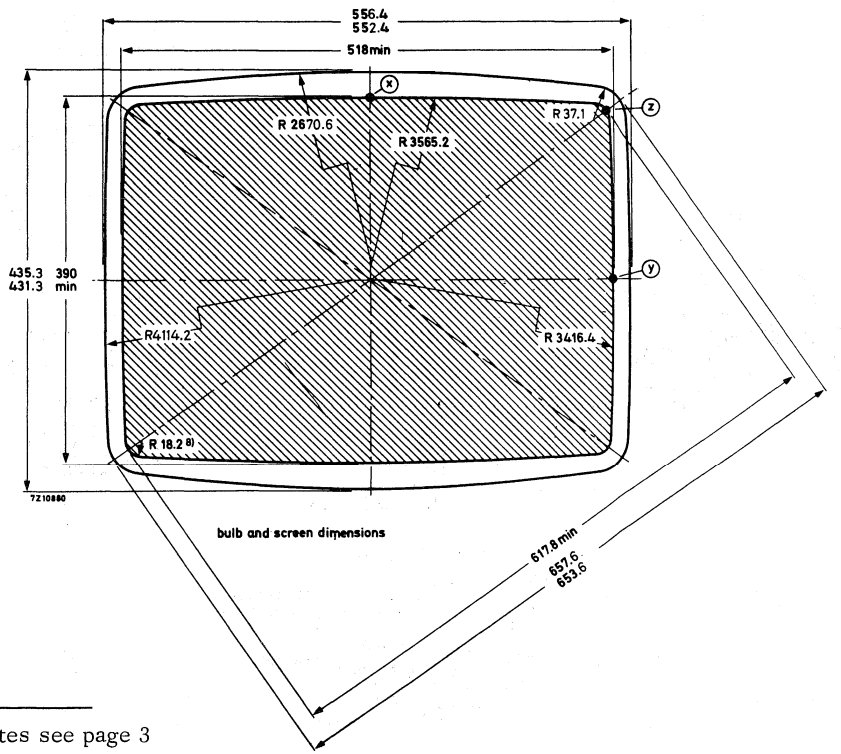

bulb and screen dimensions

Notes see page 3

MECHANICAL DATA (continued)

Dimensions in mm

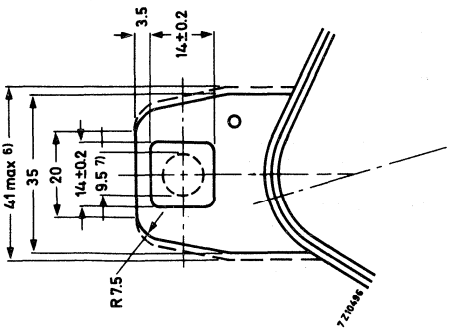

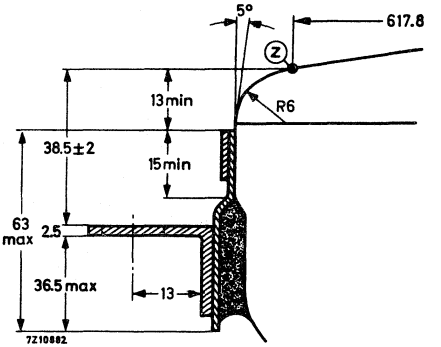

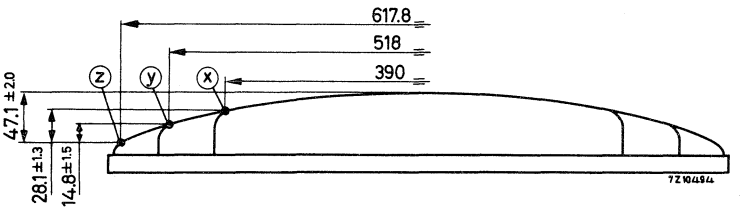

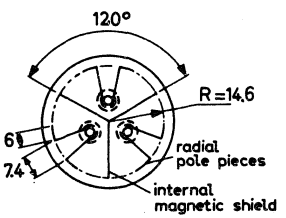

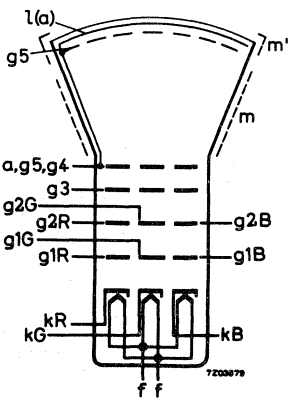

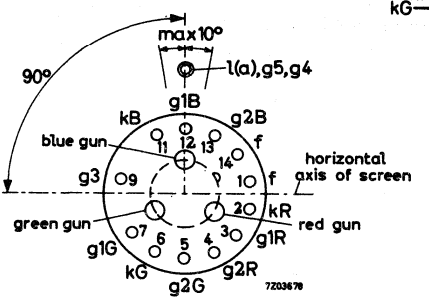

Notes see page 3

MAXIMUM CONE CONTOUR DRAWING

Dimensions in mm

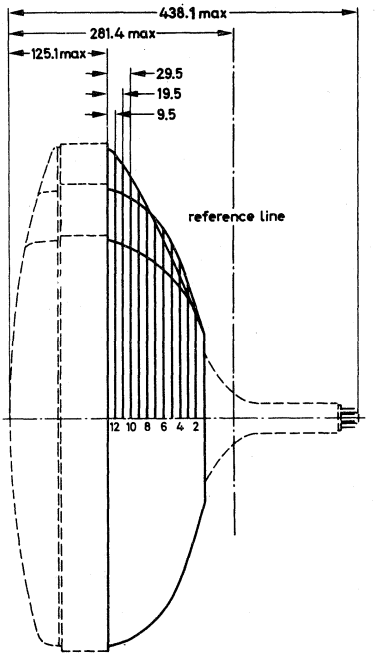

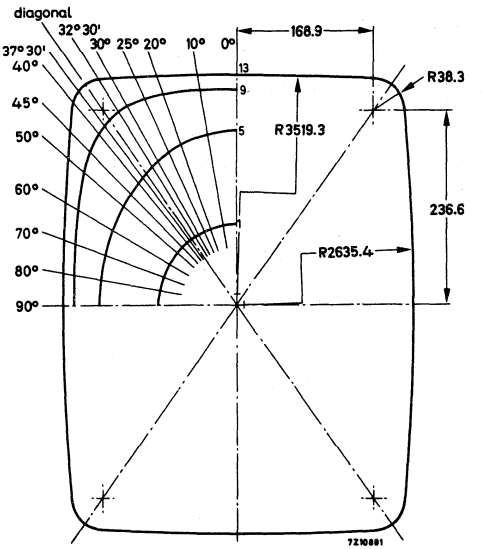

Section	Distance from section 13	Distance from centre														
		0° Long	10°	20°	25°	30°	32° 30'	35° 31' Diagon.	37° 30'	40°	45°	50°	60°	70°	80°	90° Short
1	119.5 nom.	99.41	99.18	98.70	98.46	98.26	98.18	98.11	98.07	98.05	98.05	98.13	98.51	99.08	99.65	99.93
2	109.5 "	142.11	139.07	133.90	131.47	129.35	128.43	127.45	126.89	126.28	125.38	124.90	125.19	126.92	129.46	131.09
3	99.5 "	171.81	168.10	161.35	157.99	154.92	153.52	151.98	151.06	149.99	148.22	146.91	145.65	145.96	147.25	148.22
4	89.5 "	193.96	191.36	185.57	182.25	178.92	177.30	175.41	174.22	172.78	170.12	167.81	164.25	162.10	161.14	160.96
5	79.5 "	213.30	211.91	207.82	204.94	201.66	199.92	197.75	196.31	194.48	190.86	187.37	181.15	176.39	173.40	172.38
6	69.5 "	230.11	229.83	227.80	225.69	222.75	220.99	218.64	216.97	214.76	210.09	205.28	196.20	188.93	184.26	182.64
7	59.5 "	243.54	244.45	245.30	244.63	242.68	241.15	238.79	236.97	234.39	228.50	222.08	209.60	199.67	193.44	191.31
8	49.5 "	253.95	255.93	260.00	261.38	261.16	260.19	258.10	256.19	253.23	245.82	237.40	221.05	208.54	200.97	198.44
9	39.5 "	262.25	265.05	272.04	275.72	277.94	277.99	276.37	274.36	270.89	261.35	250.54	230.35	215.70	207.15	204.34
10	29.5 "	268.76	272.13	281.47	287.43	292.66	294.27	293.44	291.30	287.13	274.58	261.11	237.50	221.30	212.11	209.13
11	19.5 "	273.39	277.11	288.19	296.17	304.82	308.65	309.17	307.00	301.85	285.09	268.75	242.46	225.33	215.81	212.75
12	9.5 "	276.43	280.34	292.47	301.96	313.84	320.37	323.09	321.27	314.80	292.49	273.50	245.58	228.11	218.52	215.46
13	0	279.00	282.96	295.36	305.23	318.01	325.40	329.00	327.49	320.66	296.49	276.73	248.34	230.73	221.08	218.00

TYPICAL OPERATING CONDITIONS

Final accelerator voltage	V_a, g5, g4	25 kV
Grid No.3 (focusing electrode) voltage	V_{g3}	4.2 to 5 kV 8)
Grid No.2 voltage for a spot cut-off voltage V_{g1} = −105 V	V_{g2}	212 to 495 V 1)
Grid No.1 voltage for spot cut-off at V_{g2} = 300 V	V_{g1}	−70 to −140 V 2)
Luminance at the centre of the screen		See page 12

EQUIPMENT DESIGN VALUES (each gun if applicable)

Valid for final accelerator voltages between 20 kV and 27.5 kV.

Grid No.3 (focusing electrode) voltage	V_{g3}	16.8 to 20% of final accelerator voltage 8)
Grid No.2 voltage	V_{g2}	See cut-off design chart page 13
Grid No.1 voltage for visual extinction of focused spot (cut-off voltage) 2)	V_{g1}	See cut-off design chart page 13
Difference in cut-off voltages between guns in any tube	ΔV_{g1}	lowest value is min. 65% of highest value
Grid No.3 (focusing electrode) current	I_{g3}	−15 to +15 μA
Grid No.2 current	I_{g2}	−5 to +5 μA
Grid No.1 current at V_{g1} = −150 V	I_{g1}	−5 to +5 μA

To produce white of the following CIE coordinates		3)	4)	5)	7)
	x	0.310	0.265	0.281	0.313
	y	0.316	0.290	0.311	0.329
Percentage of total anode current supplied by each gun (typical)					
red gun		43.5	27.9	32.2	43.1
green gun		30.0	34.9	35.9	32.0
blue gun		26.5	37.2	32.2	24.9
Ratio of anode currents red gun to green gun	min.	1.05	0.55	0.65	0.95
	av.	1.45	0.80	0.90	1.35
	max.	2.00	1.10	1.25	1.85
Ratio of anode currents red gun to blue gun	min.	1.25	0.55	0.75	1.30
	av.	1.65	0.75	1.00	1.75
	max.	2.25	1.00	1.35	2.35

Notes see page 9.

EQUIPMENT DESIGN VALUES (continued)

Required centring, measured at the centre of the screen in any direction	max.	15	mm
Correction that must be supplied by purifying magnet to compensate for mis-register in any direction	max.	115	μm ←
Lateral distance between blue spot and the converged red and green spots	max.	5	mm (in both directions)
Radial convergence displacement excluding effects of dynamic convergence (each gun) 6)	max.	8	mm (in both directions)

1) This range of V_{g2} has to be used when in circuit design fixed values for cut-off of the three guns are used.

2) This range of V_{g1} has to be used when in circuit design fixed values for V_{g2} of the three guns are used.

3) To produce colour pictures with the best possible quality, this white point should be used when the transmission system is based on this point. (Point C).

4) To produce black/white pictures a more bluish white point would be preferable. This white point corresponds virtually with the white point of current black/white picture tubes.

5) This point is a compromise between white point C and the white point x = 0.265 y = 0.290, given in order to enable good rendition of colour and black and white pictures with one white point.

6) Dynamic convergence to be effected by currents of approximately parabolic wave-shape through the convergence coils and by driving the two line deflection coil halves by separate current waveforms, both synchronized with scanning.

7) To produce colour pictures with the best possible quality, this white point should be used when the transmission system is based on this point.(Point D).

8) Optimum definition is achievable by means of dynamic focusing which involves a positive parabolic voltage of 400 V_{p-p} having the line frequency to be superposed on ← the d.c. focusing voltage.

LIMITING VALUES (Each gun if applicable)
(Design centre rating system unless otherwise specified)

Final accelerator values	V_a, g_5, g_4	max.	27.5	kV [1) 2) 3)]
		min.	20	kV [1) 4)]
Average current for three guns	I_a	max.	1000	μA [5)]
Grid No.3 (focusing electrode) voltage	V_{g3}	max.	6000	V
Grid No.2 voltage, peak, including video signal voltage	V_{g2p}	max.	1000	V
Grid No.1 voltage,				
negative	$-V_{g1}$	max.	400	V
negative, operating cut-off	$-V_{g1}$	max.	200	V
positive	V_{g1}	max.	0	V
positive peak	V_{g1p}	max.	2	V
Cathode to heater voltage,				
positive	V_{kf}	max.	250	V [6) 7)]
positive peak	V_{kfp}	max.	300	V
negative	$-V_{kf}$	max.	135	V
negative peak	$-V_{kfp}$	max.	180	V

1) Absolute max. rating system.

2) The X-ray dose rate remains below the acceptable value of 0.5 mr/h, measured with ionization chambre when the tube is used within its limiting values.

3) For optimal operating conditions the final accelerator voltage has to be stabilized. Therefore its absolute maximum value can be approached in actual operation and for this reason this value is given instead of the design centre value. During adjustment on the production line this value is likely to be surpassed considerably. It is therefore strongly recommended to first make the necessary adjustments for normal operation without picture tube.

4) Operation of the tube at lower voltages impairs brightness and resolution and may have a detrimental effect on colour purity.

5) 1500 μA permitted provided a current limiting circuit is used.

6) In order to avoid excessive hum the a.c. component of the heater to chassis voltage should be as low as possible and must not exceed 20 V_{rms}.

7) During an equipment warm-up period not exceeding 15 s V_{kf} is allowed to rise to 410 V. Between 15 s and 45 s after switching on a decrease in V_{kf} proportional with time 410 V to 250 V is permissible.

REMARKS

With the high voltage used with this tube (max. 27.5 kV) internal flash-overs may occur. These may destroy the cathode(s) of the tube. Therefore it is necessary to provide protective circuits, using spark gaps.
The spark gaps must be connected as follows:

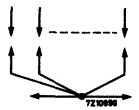

short connections to electrodes

to chassis — short connection to outer conductive coating

No other connections between the outer conductive coating and the chassis are permissible.
Additional information available on request.

During shipment and handling the tube should not be subjected to accelerations greater than 35 g in any direction.

REFERENCE LINE GAUGE (Gauge F)

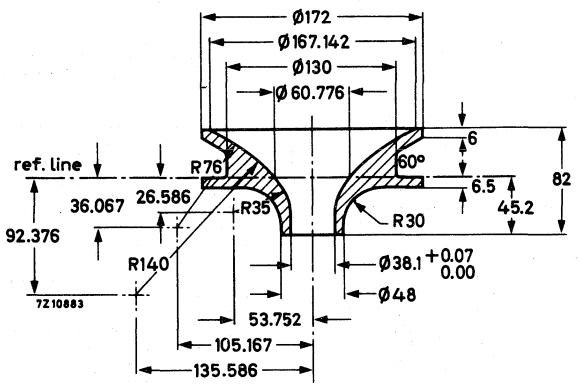

Brightness at the centre of the screen as a function of I_{total} for white CIE coordinates x = 0.310, y = 0.316 [3])

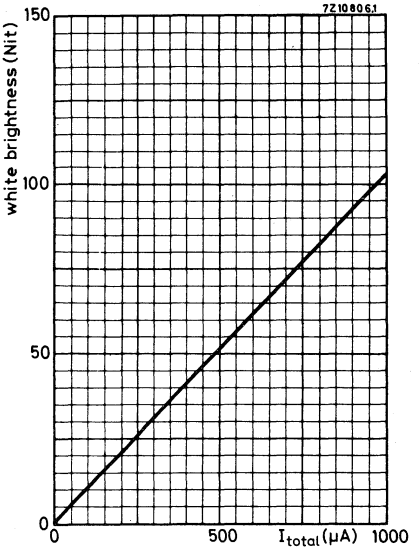

Brightness at the centre of the screen as a function of I_{total} for white CIE coordinates x = 0.265, y = 0.290 [4])

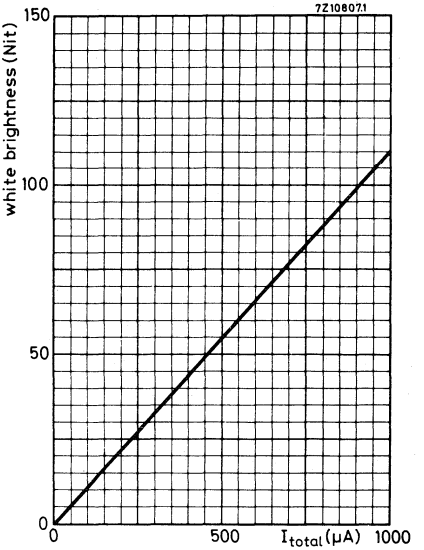

Brightness at the centre of the screen as a function of I_{total} for white CIE coordinates x = 0.281, y = 0.311 [5])

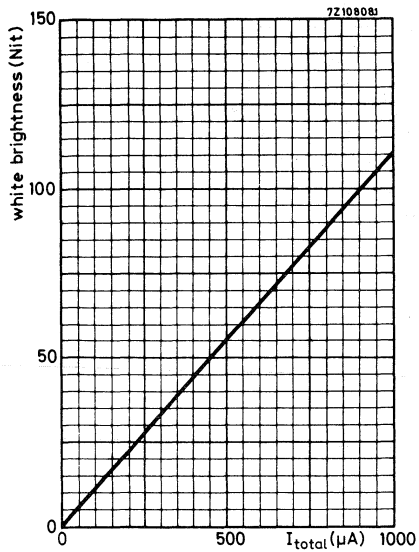

Brightness at the centre of the screen as a function of I_{total} for white CIE coordinates x = 0.313, y = 0.329 [7])

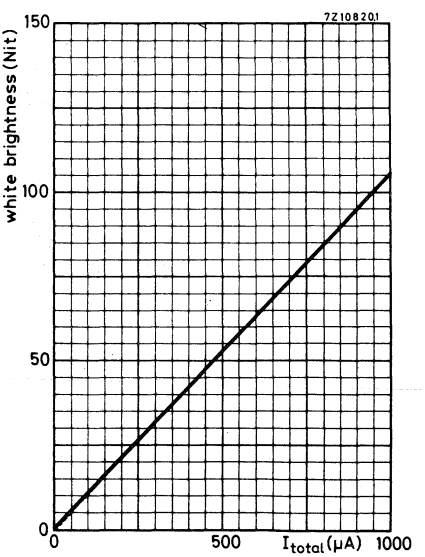

[3])[4])[5])[7]) See page 8

Scanned area 518 mm x 390 mm

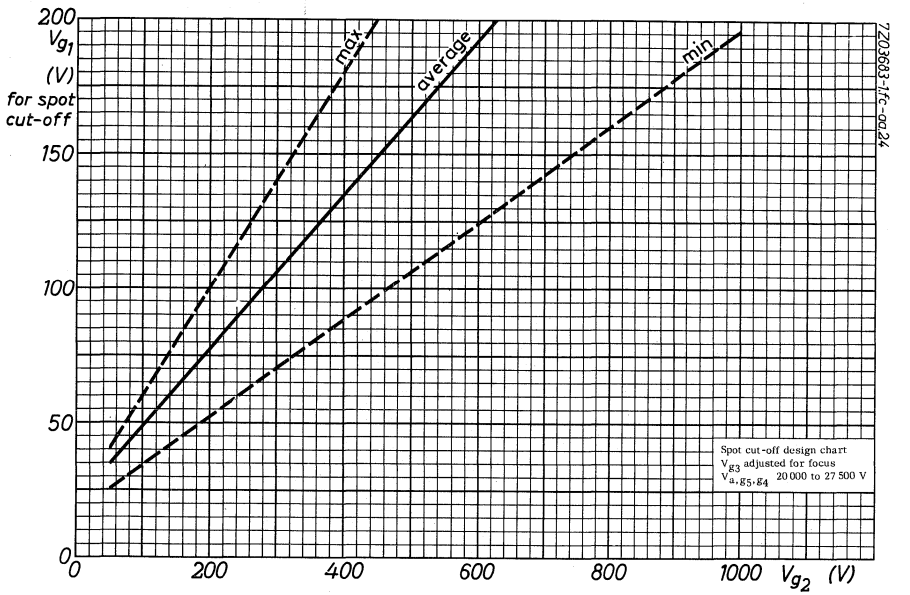
200
V_{g_1}
(V)
for spot
cut-off
150
100
50
0
0
200
400
600
800
1000
V_{g_2} (V)
max
average
min
Spot cut-off design chart
V_{g3} adjusted for focus
$V_{a,g5,g4}$ 20 000 to 27 500 V
7Z03683-1fc-oa24

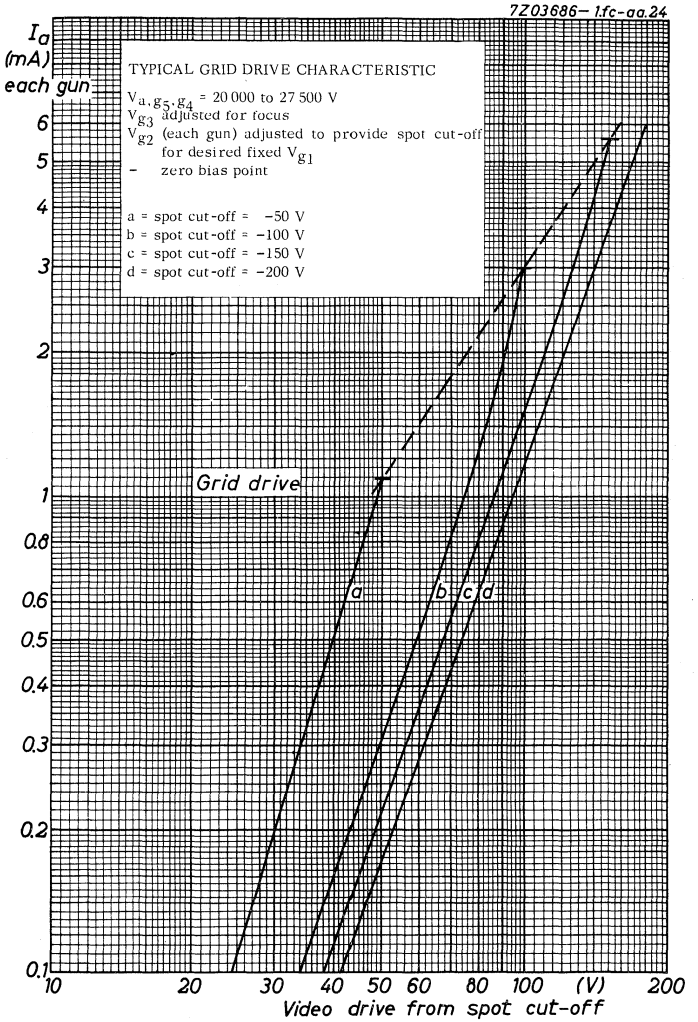
7Z03686-1.fc-aa.24
I_a (mA) each gun
TYPICAL GRID DRIVE CHARACTERISTIC
V_{a,g_5,g_4} = 20 000 to 27 500 V
V_{g_3} adjusted for focus
V_{g_2} (each gun) adjusted to provide spot cut-off for desired fixed V_{g_1}
– zero bias point
a = spot cut-off = −50 V
b = spot cut-off = −100 V
c = spot cut-off = −150 V
d = spot cut-off = −200 V
Grid drive
a
b c d
6
5
4
3
2
1
0.8
0.6
0.5
0.4
0.3
0.2
0.1
10
20
30
40
50
60
80
100
(V)
200
Video drive from spot cut-off

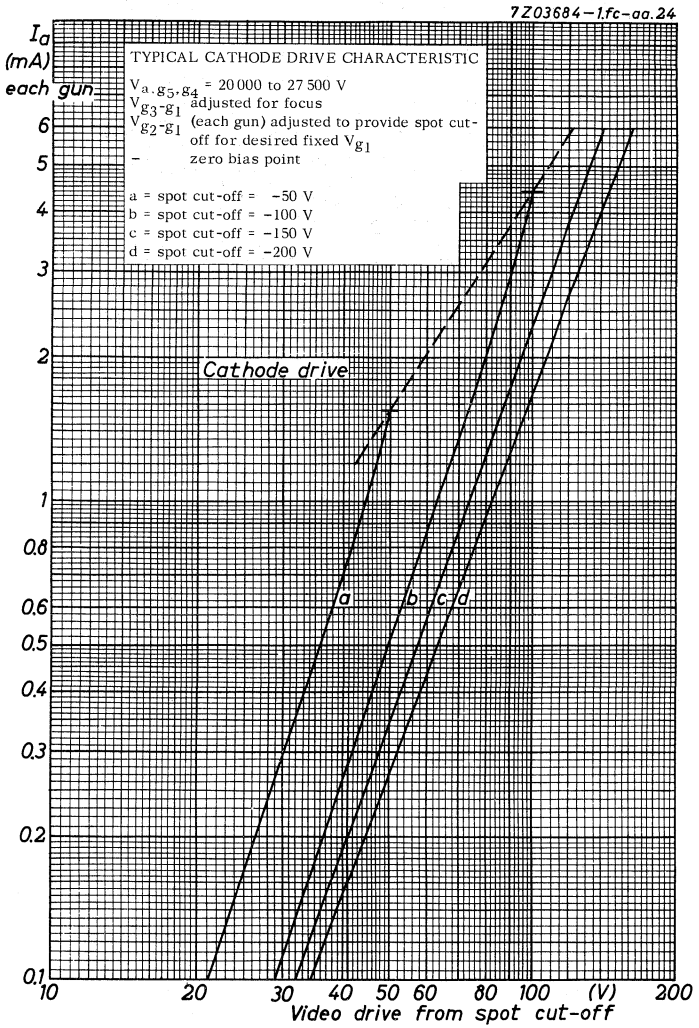
7Z03684-1.fc-aa.24
TYPICAL CATHODE DRIVE CHARACTERISTIC
V_{a,g_5,g_4} = 20 000 to 27 500 V
$V_{g_3-g_1}$ adjusted for focus
$V_{g_2-g_1}$ (each gun) adjusted to provide spot cut-off for desired fixed V_{g_1}
– zero bias point
a = spot cut-off = −50 V
b = spot cut-off = −100 V
c = spot cut-off = −150 V
d = spot cut-off = −200 V
I_a (mA) each gun
Cathode drive
a
b
c
d
6
5
4
3
2
1
0.8
0.6
0.5
0.4
0.3
0.2
0.1
10
20
30
40
50
60
80
100
(V)
200
Video drive from spot cut-off

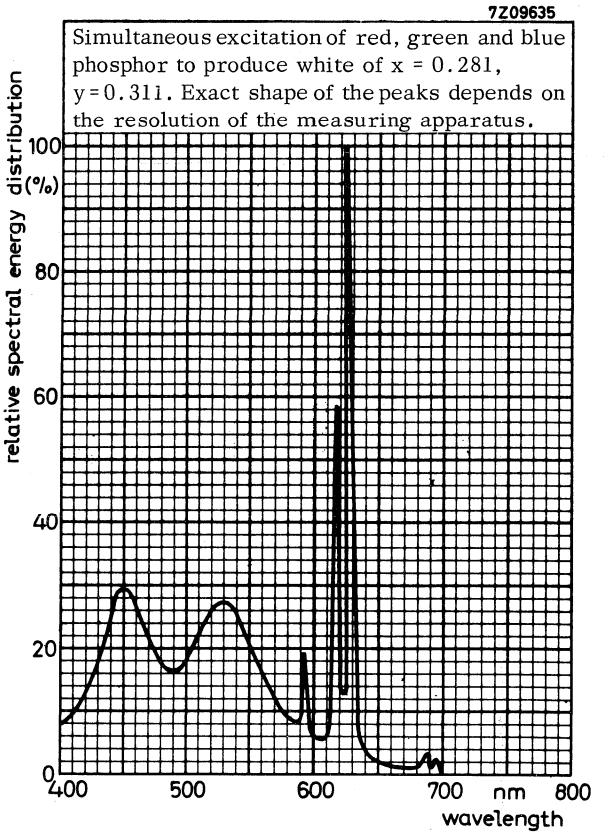

Colour coordinates

	x	y
red	0.630	0.340
green	0.315	0.600
blue	0.150	0.060

T.V. PICTURE TUBE

36 cm (14 inch), 90°, rectangular direct vision picture tube for black-and white T.V.

QUICK REFERENCE DATA		
Face diagonal	36	cm (14 inch)
Deflection angle	90°	
Overall length	360.5	mm
Neck length	165	mm
Neck diameter	36.5	mm
Light transmission of face glass	75	%
Focusing		electrostatic
Bulb		mono-panel
Heating	6.3 V, 300	mA

SCREEN

Metal backed phosphor

Luminescene	white		
Light transmission of face glass		75	%
Useful diagonal	min.	330	mm
Useful width	min.	306.5	mm
Useful height	min.	241	mm

HEATING

Indirect by A.C. or D.C.; series or parallel supply

Heater current	I_f	300	mA
Heater voltage	V_f	6.3	V

If the tube is connected in a series heater chain the surge heater voltage must not exceed 9.5 V_{rms} when the supply is switched on.

MECHANICAL DATA

Dimensions in mm

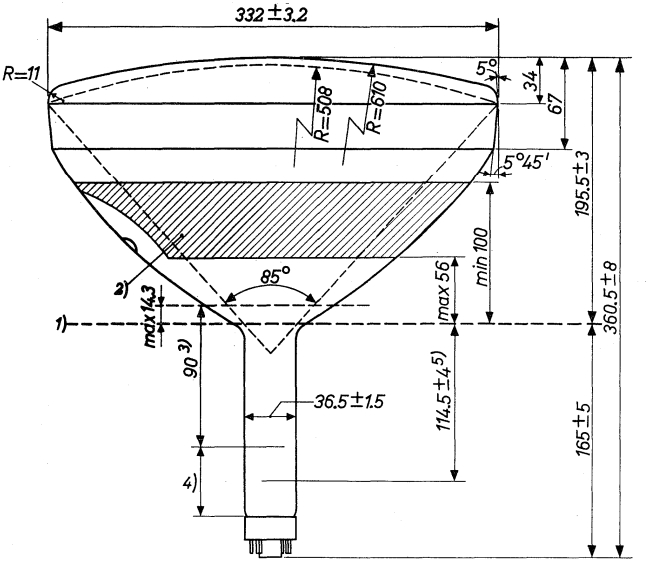

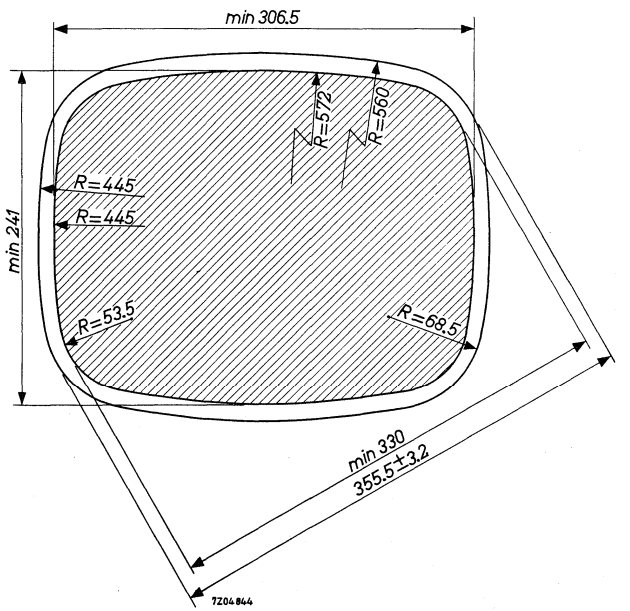

MECHANICAL DATA (continued) Dimensions in mm

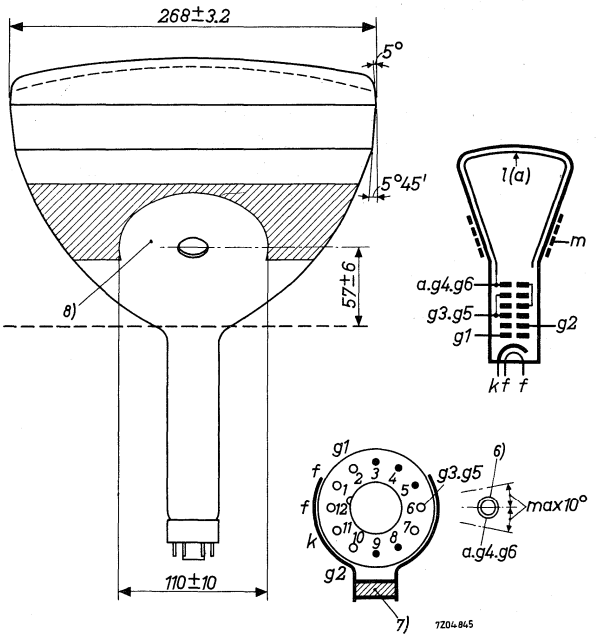

1) Reference line, determined by the plane of the upper edge of the flange of the reference line gauge when the gauge is resting on the cone. Reference line gauge B.

2) Allowable contact area.

3) Space for deflection coils and centering magnet.

4) Space for the ion trap magnet.

5) Distance from reference line to top centre of grid.

6) Recessed cavity contact. AW36-80Z without ion trap.

7) Ion trap magnet.

8) This area must be kept clean.

MECHANICAL DATA (continued)

Mounting position: any

Base : Duodecal 7 pin

Net weight : approx. 3.8 kg

The bottom circumference of the base wafer will fall within a circle concentric with the tube axis and having a diameter of 55 mm.
The socket for the base should not be rigidly mounted; it should have flexible leads and be allowed to move freely.

CAPACITANCES

Final accelerator to external conductive coating	$C_{a,g_4,g_6,/m}$	< 1200 > 500	pF pF
Cathode to all	C_k	4	pF
Grid No.1 to all	C_{g_1}	7	pF

FOCUSING electrostatic

DEFLECTION magnetic

Diagonal deflection angle	90°
Horizontal deflection angle	85°
Vertical deflection angle	68°

PICTURE CENTRING MAGNET

Field intensity perpendicular to the tube axis adjustable from 0 to 800 A/m (0 to 10 Oerstedt).
Maximum distance between centre of field of this magnet and reference line: 70 mm.

ION TRAP MAGNET

Single magnet, field intensity approx. 4000 A/m (50 Oerstedt)

TYPICAL OPERATING CONDITIONS

Grid drive service

Final accelerator voltage	V_{a,g_4,g_6}	12	kV
Focusing electrodes voltage	V_{g_3,g_5}	-70 to 230	V [1]
Grid No.2 voltage	V_{g_2}	300	V
Grid No.1 voltage for visual extinction of focused raster	V_{g_1}	-40 to -80	V

LIMITING VALUES (Design centre rating system, unless otherwise stated)

Final accelerator voltage at $I_{a,g_4,g_6} = 0$	V_{a,g_4,g_6}	max. min.	14 9	kV kV
Grids No.3 and 5 voltage,				
positive	V_{g_3,g_5}	max.	500	V
negative	$-V_{g_3,g_5}$	max.	500	V
Grid No.2 voltage	V_{g_2}	max. min.	500 200	V V
Grid No.1 voltage,				
positive	V_{g_1}	max.	0	V
positive peak	$V_{g_{1p}}$	max.	2	V
negative	$-V_{g_1}$	max.	150	V
Cathode to heater voltage,				
positive	$V_{k/f}$	max.	200	V
negative	$-V_{k/f}$	max.	125	V
positive during equipment warm-up period not exceeding 45 s	$V_{k/f}$	max.	410	V

CIRCUIT DESIGN VALUES

Grids No.3 and 5 current,				
positive	I_{g_3,g_5}	max.	10	μA
negative	$-I_{g_3,g_5}$	max.	10	μA

[1]) Voltage range to obtain optimum overall focus at 100 μA beam current.

MAXIMUM CIRCUIT VALUES

Resistance between cathode and heater	$R_{k/f}$	max.	1	MΩ
Impedance between cathode and heater	$Z_{k/f}$ (50 Hz)	max.	0.1	MΩ
Grid No.1 circuit resistance	R_{g_1}	max.	1.5	MΩ
Grid No.1 circuit impedance	Z_{g_1} (50 Hz)	max.	0.5	MΩ

T.V. PICTURE TUBE

43 cm (17 inch), 90°, rectangular direct vision picture tube for black- and white T.V.

QUICK REFERENCE DATA		
Face diagonal	43	cm (17 inch)
Deflection angle	90°	
Overall length	397	mm
Neck length	165	mm
Neck diameter	36.5	mm
Light transmission of face glass	75	%
Focusing		electrostatic
Bulb		mono-panel
Heating	6.3 V, 300	mA

SCREEN

Metal backed phosphor

Luminescence	white		
Light transmission of face glass		75	%
Useful diagonal	min.	390	mm
Useful width	min.	362	mm
Useful height	min.	273	mm

HEATING

Indirect by A.C. or D.C.; series or parallel supply

Heater current	I_f	300	mA
Heater voltage	V_f	6.3	V

If the tube is connected in a series heater chain the surge heater voltage must not exceed 9.5 V_{rms} when the supply is switched on.

MECHANICAL DATA

Dimensions in mm

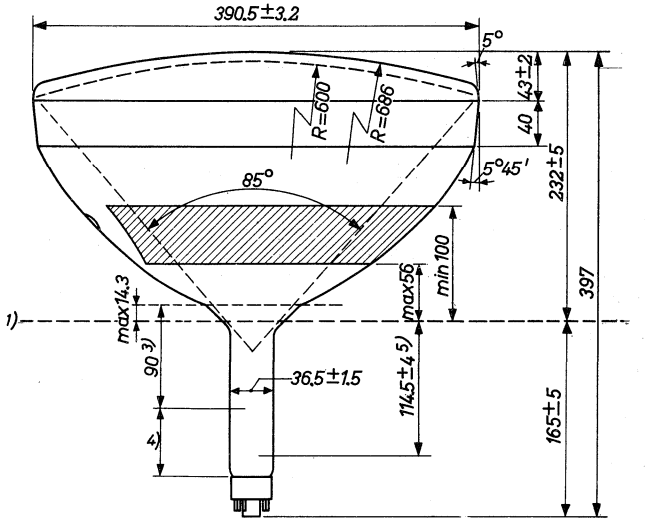

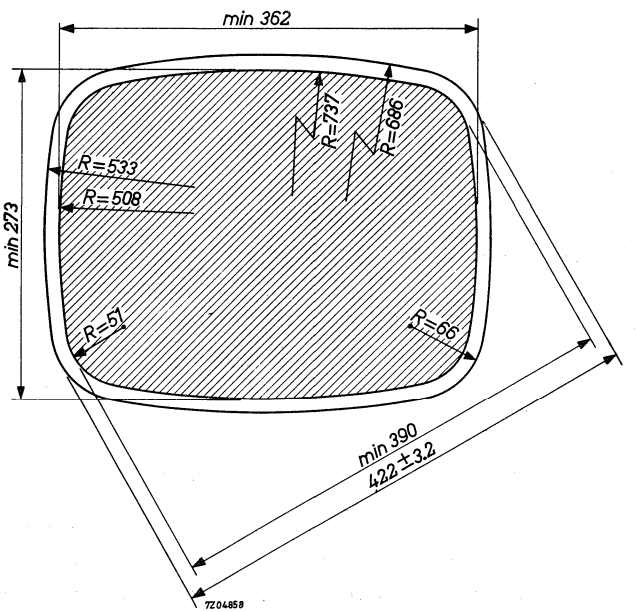

MECHANICAL DATA (continued) Dimensions in mm

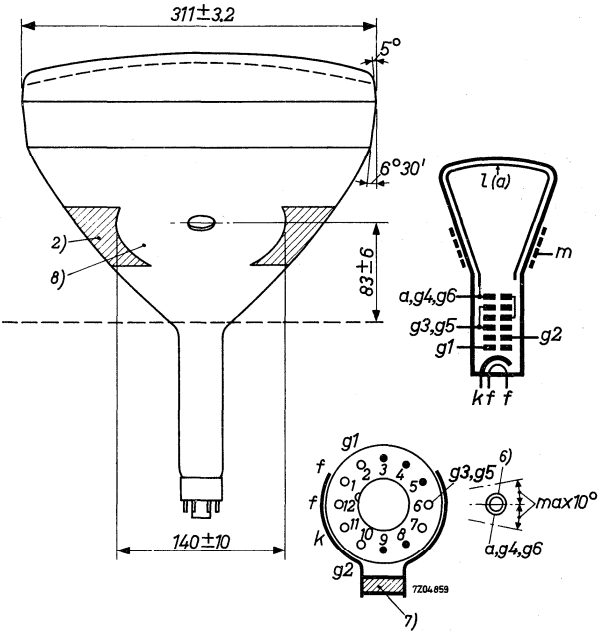

---

1) Reference line, determined by the plane of the upper edge of the flange of the reference line gauge when the gauge is resting on the cone. Reference line gauge B.

2) Allowable contact area.

3) Space for deflection coils and centering magnet.

4) Space for the ion trap magnet.

5) Distance from reference line to top centre of grid.

6) Recessed cavity contact.

7) Ion trap magnet. AW43-80Z without ion trap.

8) This area must be kept clean.

MECHANICAL DATA (continued)

Mounting position: any

Base : Duodecal 7 pin

Net weight : approx. 6 kg

The bottom circumference of the base wafer will fall within a circle concentric with the tube axis and having a diameter of 55 mm.
The socket for the base should not be rigidly mounted; it should have flexible leads and be allowed to move freely.

CAPACITANCES

Final accelerator to external conductive coating	$C_{a,g_4,g_6,/m}$	< 1400 > 900	pF pF
Cathode to all	C_k	4	pF
Grid No.1 to all	C_{g_1}	7	pF

FOCUSING electrostatic

DEFLECTION magnetic

Diagonal deflection angle	90°
Horizontal deflection angle	85°
Vertical deflection angle	68°

PICTURE CENTRING MAGNET

Field intensity perpendicular to the tube axis adjustable from 0 to 800 A/m (0 to 10 Oerstedt).
Maximum distance between centre of field of this magnet and reference line: 70 mm.

ION TRAP MAGNET

Single magnet, field intensity approx. 4000 A/m (50 Oerstedt).

TYPICAL OPERATING CONDITIONS

Grid drive service

Final accelerator voltage	V_{a,g_4,g_6}	16	kV
Focusing electrodes voltage	V_{g_3,g_5}	-75 to 235	V [1]
Grid No.2 voltage	V_{g_2}	300	V
Grid No.1 voltage for visual extinction of focused raster	V_{g_1}	-40 to -80	V

LIMITING VALUES (Design centre rating system, unless otherwise stated)

Final accelerator voltage at $I_{a,g_4,g_6} = 0$	V_{a,g_4,g_6}	max.	18	kV
		min.	12	kV
Grids No.3 and 5 voltage,				
positive	V_{g_3,g_5}	max.	500	V
negative	$-V_{g_3,g_5}$	max.	500	V
Grid No.2 voltage	V_{g_2}	max.	500	V
		min.	200	V
Grid No.1 voltage,				
positive	V_{g_1}	max.	0	V
positive peak	$V_{g_{1p}}$	max.	2	V
negative	$-V_{g_1}$	max.	150	V
Cathode to heater voltage,				
positive	$V_{k/f}$	max.	200	V
negative	$-V_{k/f}$	max.	125	V
positive during equipment warm-up period not exceeding 45 s	$V_{k/f}$	max.	410	V

CIRCUIT DESIGN VALUES

Grids No.3 and 5 current,				
positive	I_{g_3,g_5}	max.	10	μA
negative	$-I_{g_3,g_5}$	max.	10	μA

[1]) Voltage range to obtain optimum overall focus at 100 μA beam current.

MAXIMUM CIRCUIT VALUES

Resistance between cathode and heater	$R_{k/f}$	max.	1	MΩ
Impedance between cathode and heater	$Z_{k/f}$ (50 Hz)	max.	0.1	MΩ
Grid No.1 circuit resistance	R_{g_1}	max.	1.5	MΩ
Grid No.1 circuit impedance	Z_{g_1} (50 Hz)	max.	0.5	MΩ

T.V. PICTURE TUBE

43 cm (17 inch), 110°, rectangular direct vision picture tube for black- and white T.V.

QUICK REFERENCE DATA		
Face diagonal	43	cm (17 inch)
Deflection angle	110°	
Overall length	319	mm
Neck length	138	mm
Neck diameter	28.6	mm
Light transmission of face glass	75	%
Focusing		electrostatic
Bulb		mono-panel
Heating	6.3 V, 300	mA

SCREEN

Metal backed phosphor

Luminescence	white		
Light transmission of face glass		75	%
Useful diagonal	min.	400	mm
Useful width	min.	374.5	mm
Useful height	min.	295	mm

HEATING

Indirect by A.C. or D.C.; series or parallel supply

Heater current	I_f	300	mA
Heater voltage	V_f	6.3	V

If the tube is connected in a series heater chain the surge heater voltage must not exceed 9.5 V_{rms} when the supply is switched on.

MECHANICAL DATA

Dimensions in mm

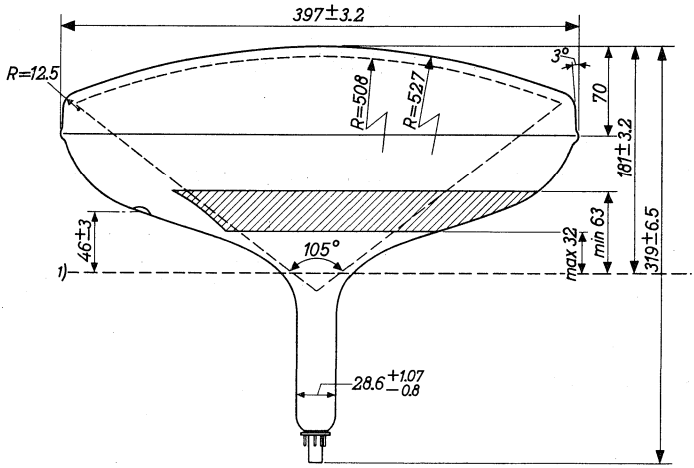

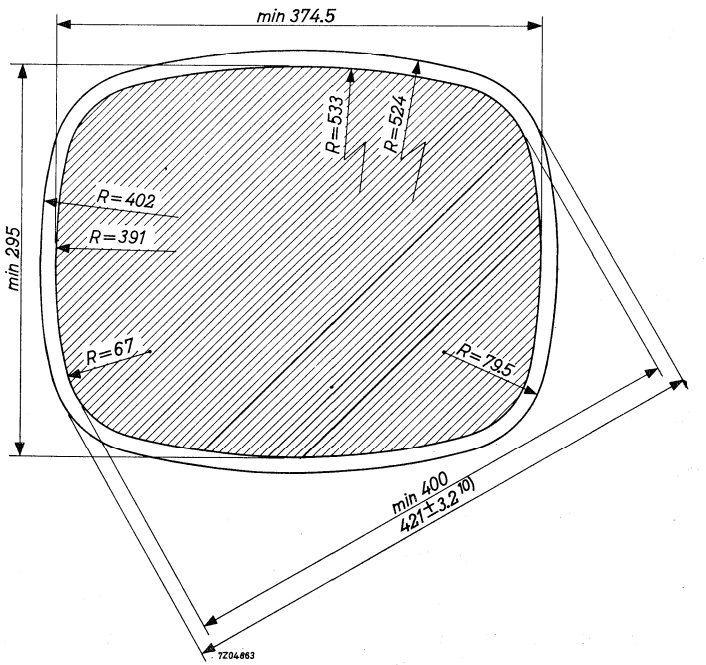

MECHANICAL DATA (continued) Dimensions in mm

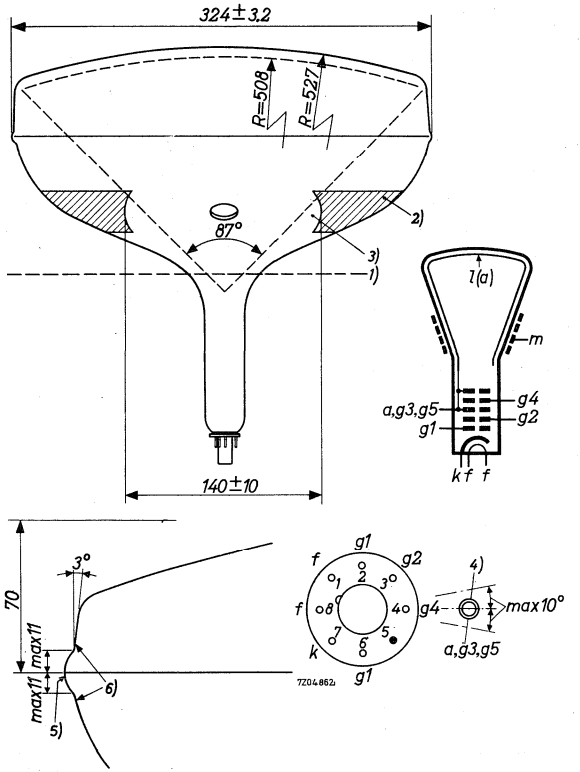

---

1) Reference line, determined by the plane of the upper edge of the flange of the reference line gauge when, the gauge is resting on the cone. Reference line gauge C.

2) Allowable contact area. The external conductive coating must be earthed.

3) This area must be kept clean.

4) Recessed cavity contact.

5) The indicated dimensions for envelope width, height and diagonal are measured at the splice line seal but do not include the bulge which may be present at the seal. At any point around the seal the bulge will not protrude more than 3.2 mm beyond the envelope surface.

6) The tube should be supported on both sides of the bulge. The mechanism used should provide clearance for the maximum dimensions of the bulge.

MECHANICAL DATA (continued)

Mounting position: any

Base : B7-183 Eightar 7 pins

Net weight : approx. 5 kg

The bottom circumference of the base wafer will fall within a circle concentric with the tube axis and having a diameter of 45 mm.
The socket for the base should not be rigidly mounted; it should have flexible leads and be allowed to move freely.

CAPACITANCES

Final accelerator to external conductive coating	$C_{a,g_3,g_5/m}$	< 1500 > 700	pF pF
Cathode to all	C_k	4	pF
Grid No.1 to all	C_{g_1}	6	pF

FOCUSING electrostatic

DEFLECTION magnetic

Diagonal deflection angle	110°
Horizontal deflection angle	105°
Vertical deflection angle	87°

PICTURE CENTRING MAGNET

Field intensity perpendicular to the tube axis adjustable from 0 to 800 A/m (0 to 10 Oerstedt).
Maximum distance between centre of field of this magnet and reference line: 57 mm.

TYPICAL OPERATING CONDITIONS

Grid drive service

Final accelerator voltage	V_{a,g_3,g_5}	16	kV
Grid No.2 voltage	V_{g_2}	300	V
Focusing electrode voltage	V_{g_4}	0 to 400	V [1]
Grid No.1 voltage for visual extinction of focused raster	V_{g_1}	-30 to -72	V

Cathode drive service

Voltages are specified with respect to grid No.1

Final accelerator voltage	V_{a,g_3,g_5}	16	kV
Grid No.2 voltage	V_{g_2}	300	V
Grid No.4 voltage	V_{g_4}	0 to 400	V [1]
Cathode voltage for visual extinction of focused raster	V_k	28 to 60	V

LIMITING VALUES (Design centre rating system, unless otherwise stated)

Final accelerator voltage at $I_{a,g_3,g_5} = 0$	V_{a,g_3,g_5}	max.	16	kV
		min.	13	kV
Grid No.4 voltage,				
positive	V_{g_4}	max.	1000	V
negative	$-V_{g_4}$	max.	500	V
Grid No.2 voltage	V_{g_2}	max.	500	V
		min.	200	V
Grid No.1 voltage,				
positive	V_{g_1}	max.	0	V
positive peak	$V_{g_{1p}}$	max.	2	V
negative	$-V_{g_1}$	max.	150	V
negative peak	$-V_{g_{1p}}$	max.	400	V [2]

[1] Voltage range to obtain optimum overall focus at 100 μA beam current.

[2] Maximum pulse duration 22% of a cycle but max. 1.5 ms.

LIMITING VALUES (continued)

Cathode to grid No.1 voltage,				
positive	V_{k/g_1}	max.	150	V
positive peak	$V_{k/g_{1p}}$	max.	400	V [1]
negative	$-V_{k/g_1}$	max.	0	V
negative peak	$-V_{k/g_{1p}}$	max.	2	V
Cathode to heater voltage,				
positive	$V_{k/f}$	max.	200	V
negative	$-V_{k/f}$	max.	125	V
positive during equipment warm-up period not exceeding 45 s	$V_{k/f}$	max.	410	V

CIRCUIT DESIGN VALUES

Grid No.4 current,				
positive	I_{g_4}	max.	25	μA
negative	$-I_{g_4}$	max.	25	μA
Grid No.2 current,				
positive	I_{g_2}	max.	15	μA
negative	$-I_{g_2}$	max.	15	μA

MAXIMUM CIRCUIT VALUES

Resistance between cathode and heater	$R_{k/f}$	max.	1	MΩ
Impedance between cathode and heater	$Z_{k/f}$ (50 Hz)	max.	0.1	MΩ
Grid No.1 circuit resistance	R_{g_1}	max.	1.5	MΩ
Grid No.1 circuit impedance	Z_{g_1} (50 Hz)	max.	0.5	MΩ

[1]) Maximum pulse duration 22% of a cycle but max. 1.5 ms.

T.V. PICTURE TUBE

Near replacement type AW43-88

T.V. PICTURE TUBE

Replacement type A47-14W

T.V. PICTURE TUBE

53 cm (21 inch), 90°, rectangular direct vision picture tube for black- and white T.V.

QUICK REFERENCE DATA		
Face diagonal	53	cm (21 inch)
Deflection angle	90°	
Overall length	482	mm
Neck length	165	mm
Neck diameter	36.5	mm
Light transmission of face glass	70	%
Focusing		electrostatic
Bulb		mono-panel
Heating	6.3 V, 300	mA

SCREEN

Metal backed phosphor

Luminescence	white		
Light transmission of face glass		70	%
Useful diagonal	min.	511	mm
Useful width	min.	482	mm
Useful height	min.	378	mm

HEATING

Indirect by A.C. or D.C.; series or parallel supply

Heater current	I_f	300	mA
Heater voltage	V_f	6.3	V

If the tube is connected in a series heater chain the surge heater voltage must not exceed 9.5 V_{rms} when the supply is switched on.

MECHANICAL DATA

Dimensions in mm

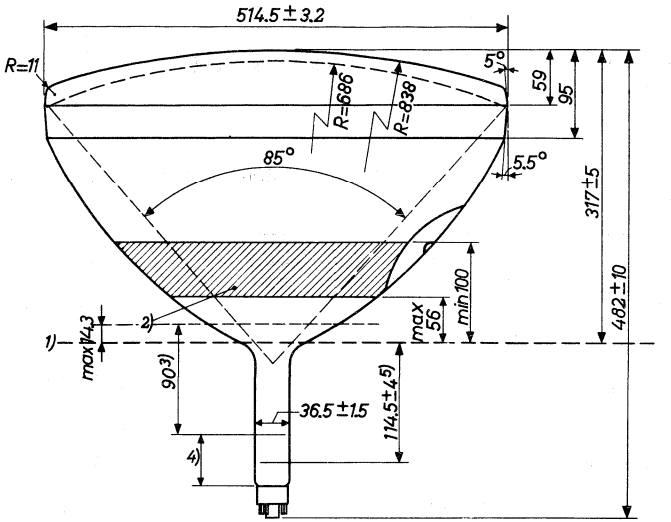

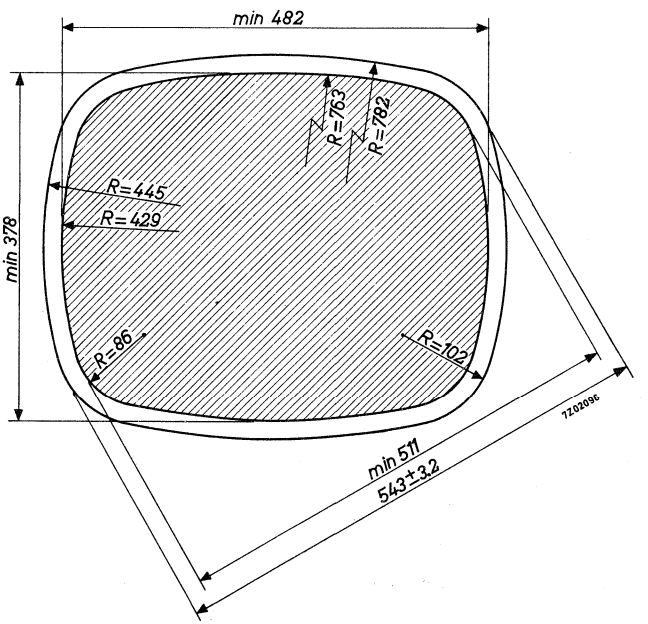

MECHANICAL DATA (continued) Dimensions in mm

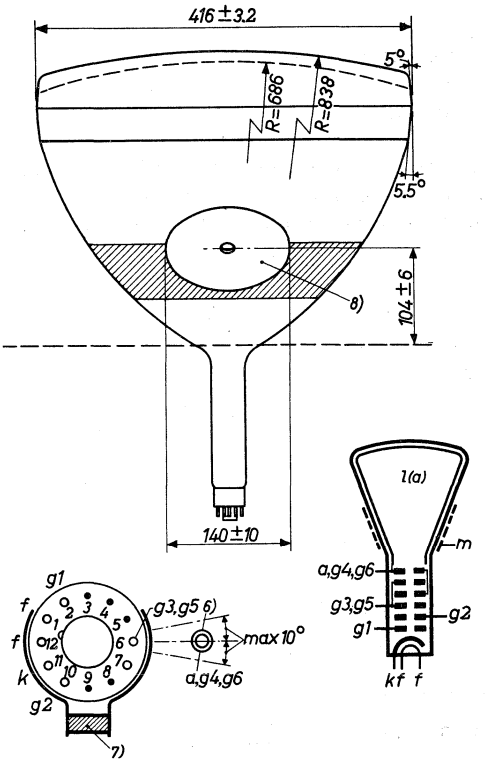

---

1) Reference line, determined by the plane of the upper edge of the flange of the reference line gauge when the gauge is resting on the cone. Reference line gauge B.

2) Allowable contact area.

3) Space for deflection coils and centering magnet.

4) Space for the ion trap magnet.

5) Distance from reference line to top centre of grid.

6) Recessed cavity contact.

7) Ion trap magnet. AW53-80Z without ion trap.

8) This area must be kept clean.

MECHANICAL DATA (continued)

Mounting position: any

Base : Duodecal 7 pins

Net weight : approx. 10 kg

The bottom circumference of the base wafer will fall within a circle concentric with the tube axis and having a diameter of 55 mm.
The socket for the base should not be rigidly mounted; it should have flexible leads and be allowed to move freely.

CAPACITANCES

Final accelerator to external conductive coating	$C_{a,g_3,g_5/m}$	< 1750 > 1250	pF pF
Cathode to all	C_k	4	pF
Grid No.1 to all	C_{g_1}	7	pF

FOCUSING electrostatic

DEFLECTION magnetic

Diagonal deflection angle	90°
Horizontal deflection angle	85°
Vertical deflection angle	68°

PICTURE CENTRING MAGNET

Field intensity perpendicular to the tube axis adjustable from 0 to 800 A/m (0 to 10 Oerstedt).
Maximum distance between centre of field of this magnet and reference line: 70 mm.

ION TRAP MAGNET

Single magnet, field intensity approx. 4000 A/m (50 Oerstedt)

For:

TYPICAL OPERATING CONDITIONS

LIMITING VALUES

CIRCUIT DESIGN VALUES

MAXIMUM CIRCUIT VALUES

please refer to type AW 43-80

T.V. PICTURE TUBE

53 cm (21 inch), 110°, rectangular direct vision picture tube for black-and white T.V.

QUICK REFERENCE DATA		
Face diagonal	53	cm (21 inch)
Deflection angle	110°	
Overall length	373	mm
Neck length	138	mm
Neck diameter	28.6	mm
Light transmission of face glass	75	%
Focusing		electrostatic
Bulb		mono-panel
Heating	6.3 V, 300	mA

SCREEN

Metal backed phosphor

Luminescence	white		
Light transmission of face glass		75	%
Useful diagonal	min.	514.5	mm
Useful width	min.	484	mm
Useful height	min.	382.5	mm

HEATING

Indirect by A.C. or D.C.; series or parallel supply

Heater current	I_f	300	mA
Heater voltage	V_f	6.3	V

If the tube is connected in a series heater chain the surge heater voltage must not exceed 9.5 V_{rms} when the supply is switched on.

MECHANICAL DATA

Dimensions in mm

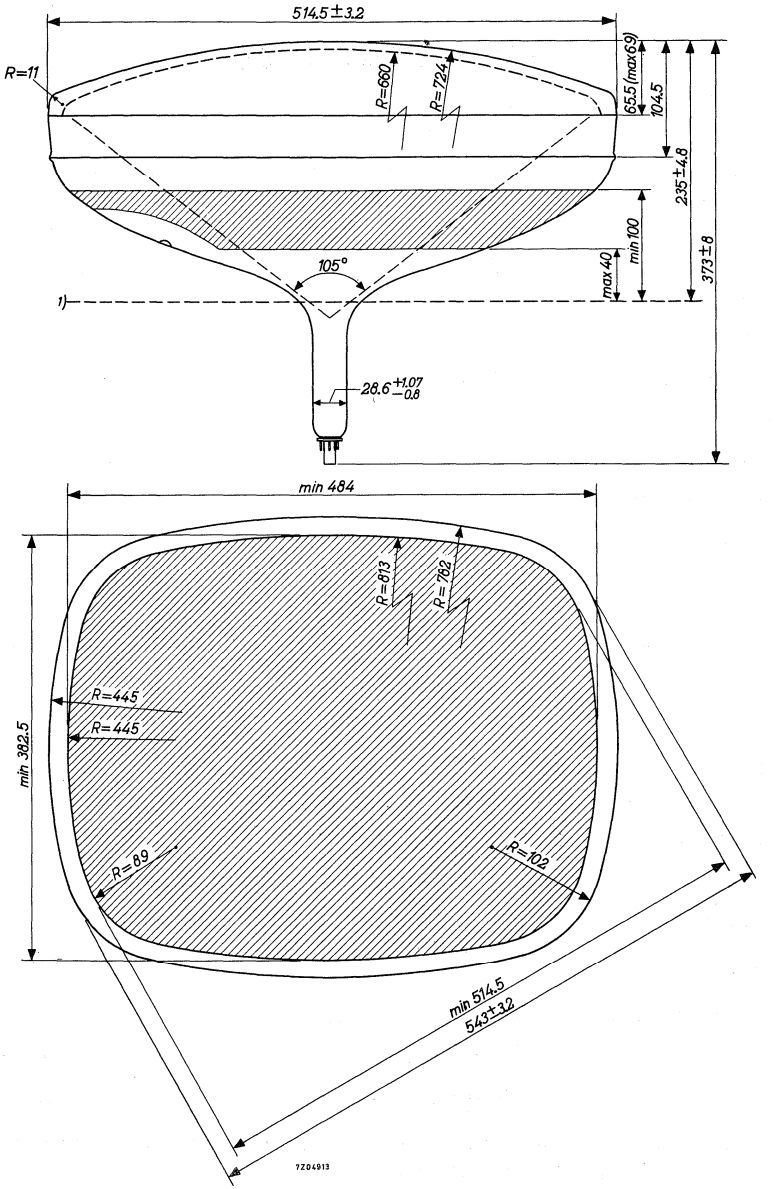

MECHANICAL DATA (continued) Dimensions in mm

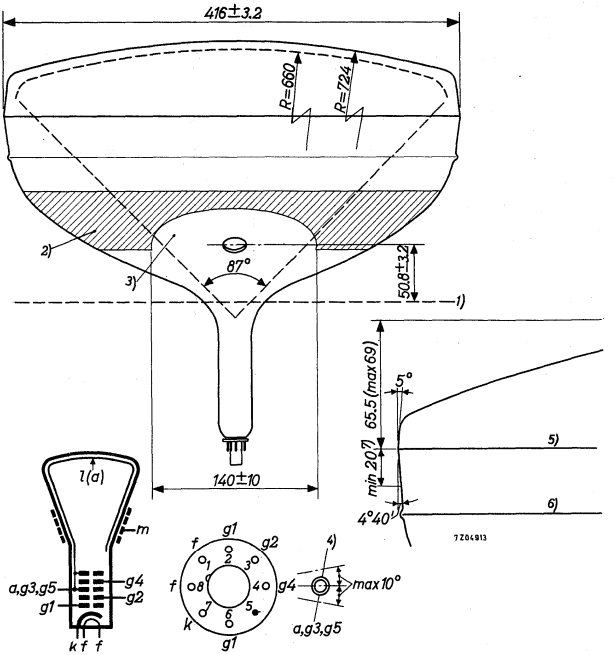

---

1) Reference line, determined by the plane of the upper edge of the flange of the reference line gauge when the gauge is resting on the cone. Reference line gauge C.

2) Allowable contact area. The external conductive coating must be earthed.

3) This area must be kept clean.

4) Recessed cavity contact.

5) The face-plate dimensions are measured at the mould-match line.

6) Splice-line of face-plate. At any point around the splice-line seal the bulge at this seal will not protrude more than 1.6 mm beyond the tube circumference at mould-match line so that the indicated max. face-plate dimensions will not exceeded by more than 3.2 mm.

7) Minimum undisturbed area between mould-match line and splice line available for mounting a tube support band. No excessive pressure should be exerted by the support band on the splice line seal.

MECHANICAL DATA (continued)

Mounting position: any

Base : B7-183 Eightar 7 pins

Net weight : approx. 10 kg

The bottom circumference of the base wafer will fall within a circle concentric with the tube axis and having a diameter of 45 mm.
The socket for the base should not be rigidly mounted; it should have flexible leads and be allowed to move freely.

CAPACITANCES

Final accelerator to external conductive coating	$C_{a,g_3,g_5/m}$	< 2500 > 1200	pF pF
Cathode to all	C_k	4	pF
Grid No.1 to all	C_{g_1}	6	pF

FOCUSING electrostatic

DEFLECTION magnetic

Diagonal deflection angle	110°
Horizontal deflection angle	105°
Vertical deflection angle	87°

PICTURE CENTRING MAGNET

Field intensity perpendicular to the tube axis adjustable from 0 to 800 A/m (0 to 10 Oerstedt).
Maximum distance between centre of field of this magnet and reference line: 57 mm.

For;

TYPICAL OPERATING CONDITIONS

LIMITING VALUES

CIRCUIT DESIGN VALUES

MAXIMUM CIRCUIT VALUES

please refer to type AW 43-88

T.V. PICTURE TUBE

Near replacement type A59-15W

T.V. PICTURE TUBE

Replacement type A59-15W

T.V. PICTURE TUBE

61 cm (24 inch), 110° rectangular direct vision picture tube for black- and white T.V.

QUICK REFERENCE DATA		
Face diagonal	61	cm (24 inch)
Deflection angle	110°	
Overall length	403	mm
Neck length	138	mm
Neck diameter	28.6	mm
Light transmission of face glass	75	%
Focusing		electrostatic
Bulb		mono panel
Heating	6.3 V, 300	mA

SCREEN

Metal backed phosphor			
Luminescence	white		
Light transmission of face glass		75	%
Useful diagonal	min.	579.5	mm
Useful width	min.	544.5	mm
Useful height	min.	428.5	mm

HEATING

Indirect by A.C. or D.C.; series or parallel supply

Heater current	I_f	300	mA
Heater voltage	V_f	6.3	V

If the tube is connected in a series heater chain the surge heater voltage must not exceed 9.5 V_{rms} when the supply is switched on.

MECHANICAL DATA

Dimensions in mm

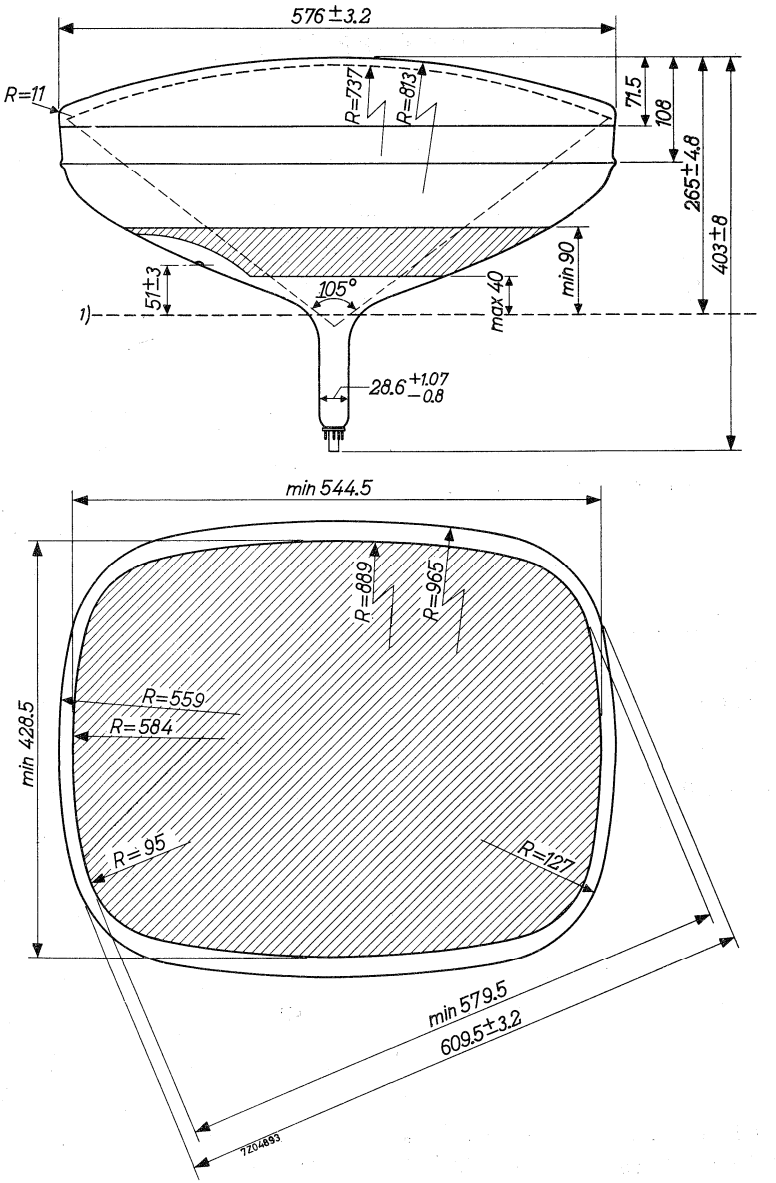

MECHANICAL DATA (continued) Dimensions in mm

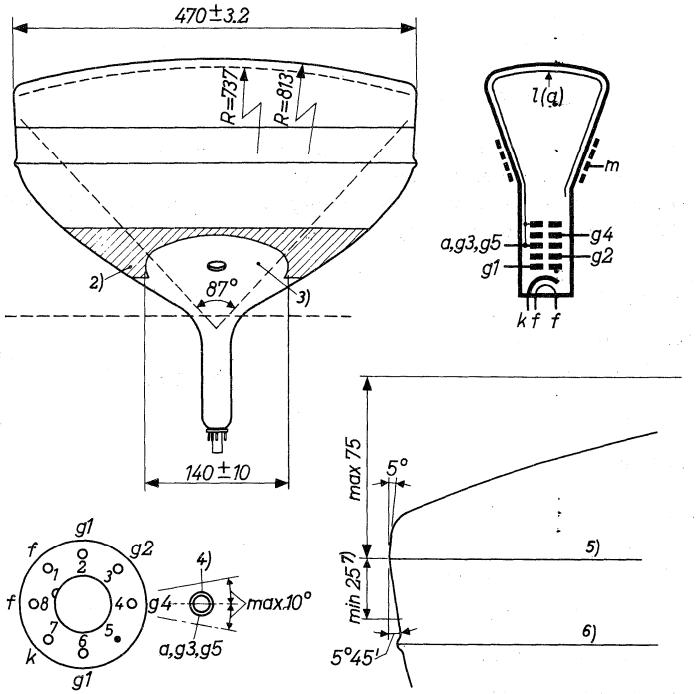

---

1) Reference line, determined by the plane of the upper edge on the flange of the reference line gauge when the gauge is resting on the cone. Reference line gauge C.

2) Allowable contact area. The external conductive coating must be earthed.

3) This area must be kept clean.

4) Recessed cavity contact.

5) Mould match line.

6) Splice-line of face-plate. At any point around the splice-line seal the bulge at this seal will not protrude more than 1.6 mm beyond the tube circumference at mould-match line so that the indicated max. faceplate dimensions will not be exceeded by more than 3.2 mm.

7) Minimum undisturbed area between mould-match line and splice line available for mounting a tube support band. No excessive pressure should be exerted by the support band on the splice line seal.

MECHANICAL DATA (continued)

Mounting position: any

Base : B7-183. Eightar 7 pins

Net weight : approx. 13 kg

The bottom circumference of the base wafer will fall within a circle concentric with the tube axis and having a diameter of 45 mm.
The socket for the base should not be rigidly mounted; it should have flexible leads and be allowed to move freely.

CAPACITANCES

Final accelerator to external conductive coating	$C_{a,g_3,g_5/m}$	< 2500 > 1700	pF pF
Cathode to all	C_k	4	pF
Grid No.1 to all	C_{g_1}	6	pF

FOCUSING electrostatic

DEFLECTION magnetic

Diagonal deflection angle	110°
Horizontal deflection angle	105°
Vertical deflection angle	87°

PICTURE CENTRING MAGNET

Field intensity perpendicular to the tube axis adjustable from 0 to 800 A/m (0 to 10 Oerstedt).
Maximum distance between centre of field of this magnet and reference line: 57 mm.

TYPICAL OPERATING CONDITIONS

LIMITING VALUES

CIRCUIT DESIGN VALUES

MAXIMUM CIRCUIT VALUES

Refer to type AW 43-88

INDEX OF TYPENUMBERS

Type No.	Type No.
A28-13W	A66-120X
A28-14W	A66-140X
A31-20W	AW36-80
A31-120W	AW36-80Z
A44-120W	AW43-80
A47-11W	AW43-80Z
A47-14W	AW43-88
A47-26W	AW43-89
A50-120W	AW47-91
A56-120X	AW53-80
A59-11W	AW53-80Z
A59-15W	AW53-88
A59-16W	AW59-90
A59-23W	AW59-91
A61-120W	AW61-88
A63-11X	
A63-120X	
A65-11W	

23DGP4A See A59-16W

General section

T.V. Picture tubes

Printed in The Netherlands

9399 241 14101